saxun
by Giménez Ganga

Assembly instructions

Bioclimatic Pergola P-150 CR

4 columns

Table of Contents

We do not provide the screws for fixing-anchoring to the wall and/or foundations. The fitter must choose the adequate rod/screw/plug/nut/washer system for fixing and flushing to the foundations and/or wall based on the nature of these surfaces.
In any case, the screws must be in stainless steel.

1. Installation of the columns *4*

1.1. Installing the fixation for the column base *4*

1.2 Attachment of the base to the column *7*

1.3 Positioning of the reinforcement brackets *8*

2. Installation of beams *9*

2.1 Beam-to-column assembly *9*

2.1.1 Combination with closed column *12*

2.2 Levelling of the structure *14*

2.3 Installation of the clip-on manifolds *15*

2.4 Installation of gomme parts *16*

3. Drainage *17*

3.1 Installation of U-shaped drainage channels *17*

3.2 Installation of drainage parts *18*

3.2.1 Drainage channel closed column *22*

4. Installation of slats *23*

4.1 Installation of slats *23*

4.2 Installation of transmission plate *26*

4.3 Motor installation *26*

5. Electrical connections *28*

The connection of the electrical installation must be done adhering to the current regulations for low voltage (REBT).

6.1 Teleco documentation *28*

6.2 Somfy documentation *28*

6.3 Installation of column-mounted automation systems *28*

6.4 Perimeter LED installation *29*

6. Installing column cap *30*

6.1 Trim cap *30*

6.2 Top cap *31*

7. Maintenance *32*

Before assembling, please read the maximum tightening torque for each type of screw, as indicated in this section.

Annex I Disassembly and disposal of packaging and product components at the end of the product's service life *33*

Annex II Warranty certificate *37*

Bioclimatic Pergola installation check sheet *39*

1. Installation

1.1 Installing the fixation for the column base

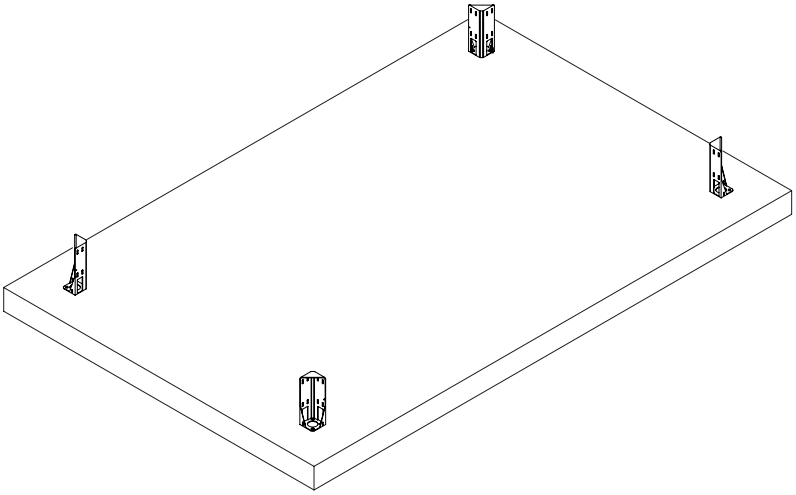

Measure the foundation in order to make sure that the levelling is correct.

Install the base fixings using M-12 screws (not included), with a quality of at least AISI 304 (stainless steel), leaving all bases properly levelled.

Once the column bases are installed in place, measure the diagonal lines to ensure both distances are equal.

Important

- Recommended installation is against a wall with reinforced concrete floor of at least 150 mm thickness (or surface of equivalent strength) by means of 12 mm stainless steel fittings (not included).

- Leave a 100 mm space above the beam so the slats can turn.

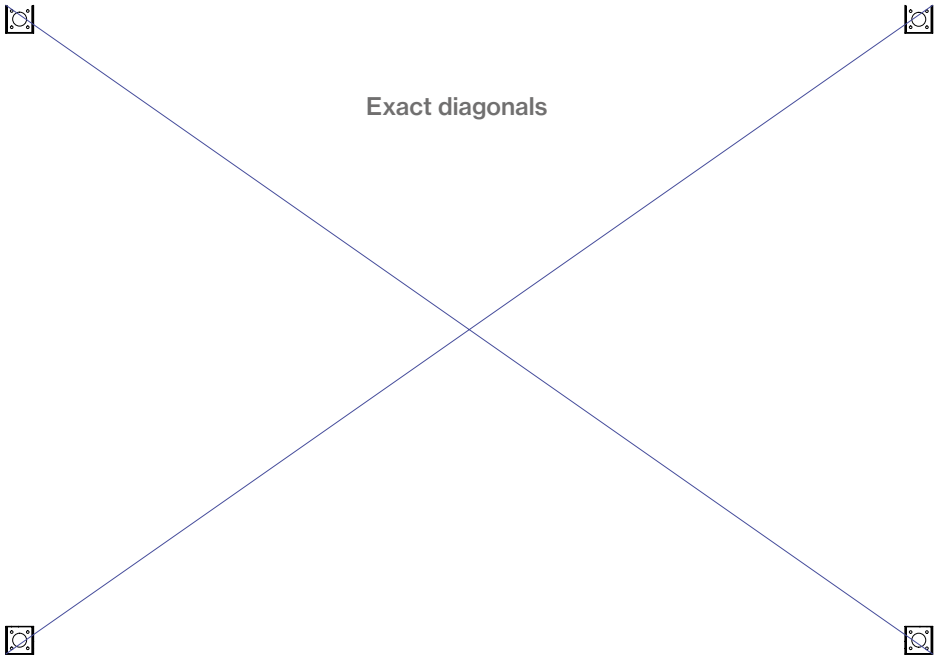

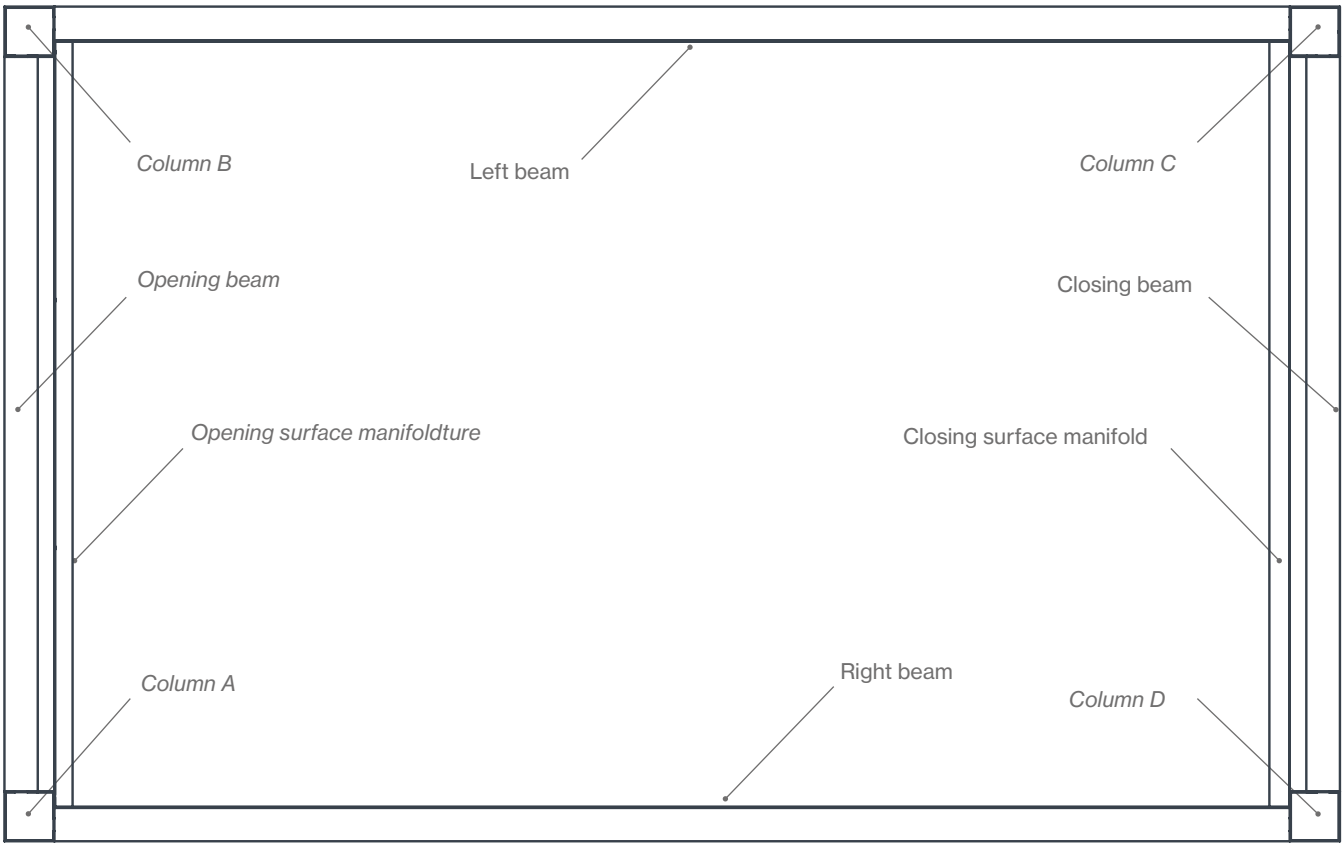
Column B
Left beam
Column C
Opening beam
Closing beam
Opening surface manifoldture
Closing surface manifold
Column A
Right beam
Column D

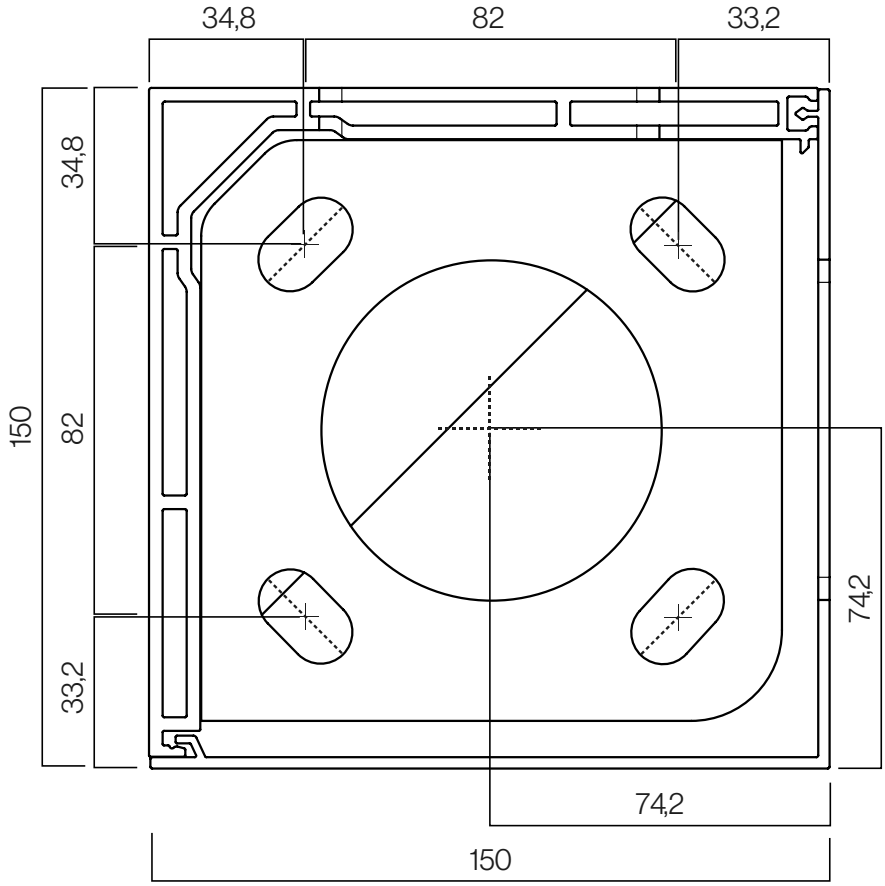
34,8
82
33,2
34,8
82
33,2
150
74,2
74,2
150

Important

Make sure you know which end of the left and right beam corresponds to the opening and closing. In the figure, we show the distance from the first mechanised hole in the opening and in the closing.

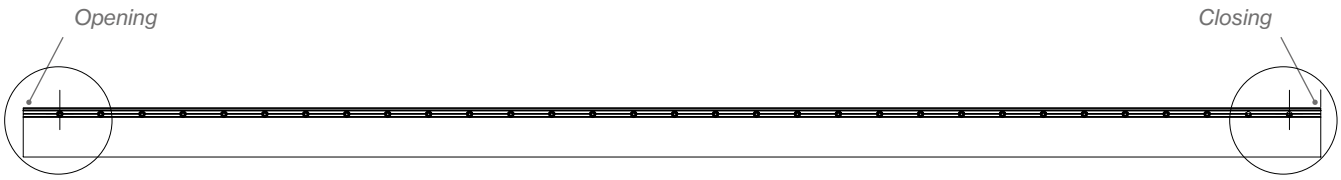

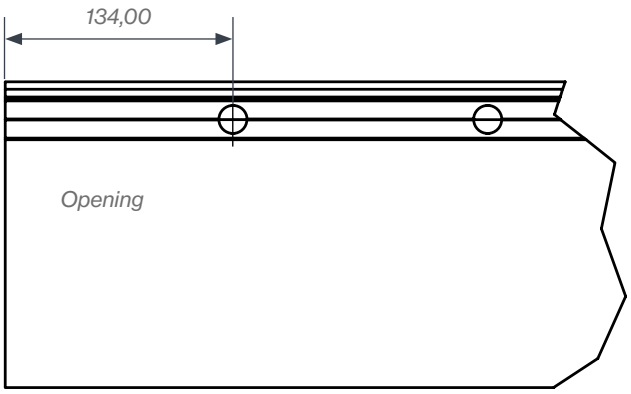

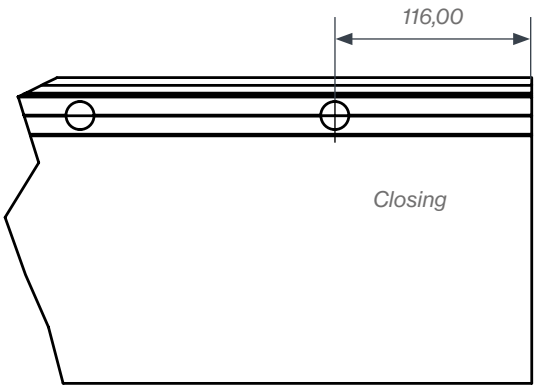

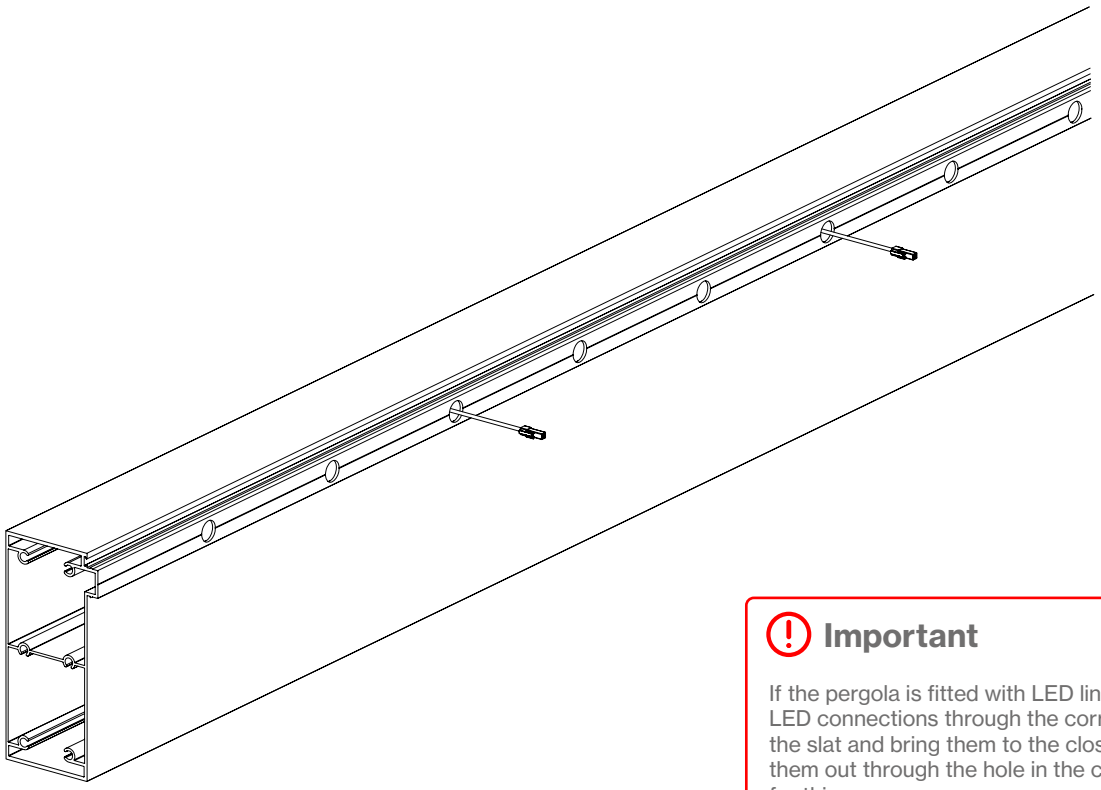

Important

If the pergola is fitted with LED lines, remove the LED connections through the corresponding hole in the slat and bring them to the closure area to lead them out through the hole in the column machined for this purpose.

1.2 Attachment of the base to the column

1. Place the base on the column and screw it to the inner reinforcement plates of the column using DIN 933 A2 M8x16 screws and DIN 125 A2 M8 washers (1).

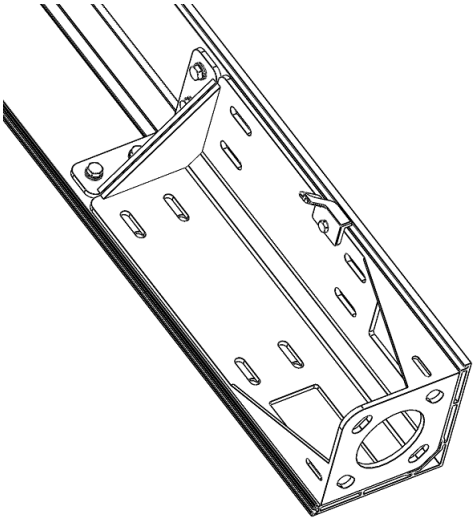

2. Place over the screw DIN 933 A2 M12x50, which will allow the height of the column to be adjusted, and tighten it loosely. (2)

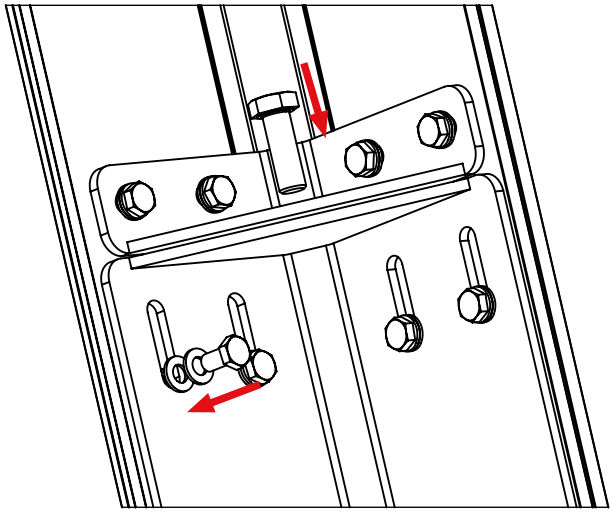

3. Screw a coupling piece of the cover profile onto the base L using a DIN 933 A2 M6x10 screw. (3)

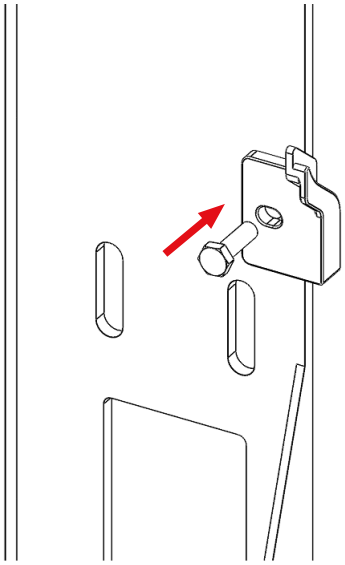

1.3 Positioning of the reinforcement brackets

Once the column has been bolted to the base, fit the reinforcement bracket, dropping it on top of the column.

Then screw a coupling piece of the cover profile onto the reinforcement bracket using a DIN 933 A2 M6x25 screw. Finally, place the column in its position in the assembly.

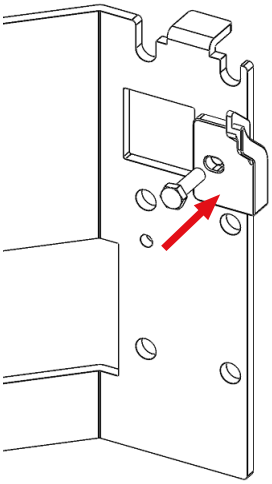

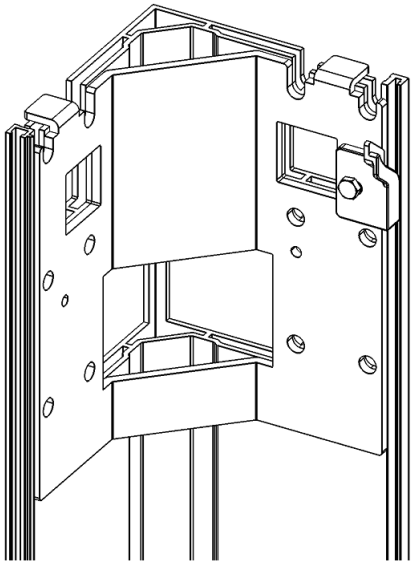

Instructions
Assembly video

	Scan the QR code with your mobile device or click to access.

2. Installation of the beams

2.1 Beam to column assembly

Screw 2 DIN (ISO 7978) A2 M8x50 screws with DIN 125 A2 M8 washers to the two upper screw holders at both ends of the beams, leaving a gap of 3 cm between the screw head and the start of the beam.

With two columns in position in the assembly, rest the bolts of the beams on the columns. Loosely insert the remaining screws to fix the position of the beam and tighten to the specified torque.

Important

It is not necessary to unscrew the gutters from the beams to assemble the structure.

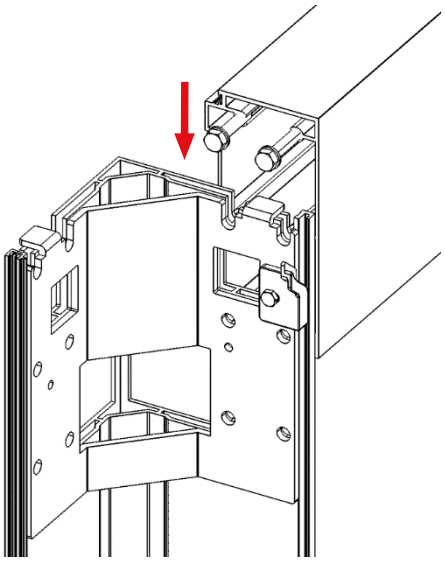

DIN 933 M8x16 A-70 screws

Thread	M8
MA tightening torque (Nm)	24

Important

Do not tighten the upper right screw; the top cover fitting will be fixed here later.

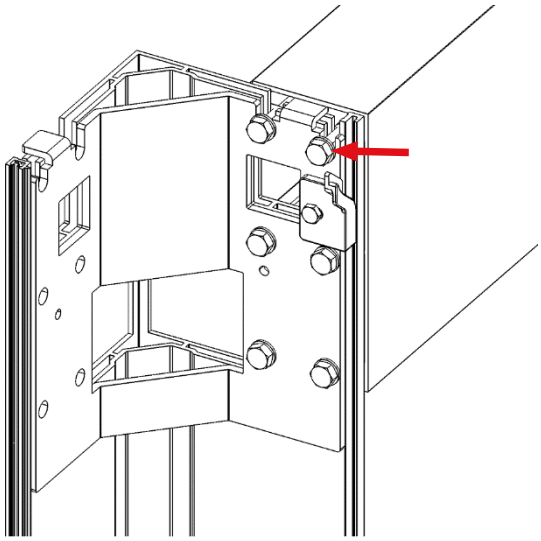

Important

Before tightening the screws, check that the beam is parallel to the edge of the column and that there is a gap of 2.5 mm between the beam and the column for fitting the trim profile.

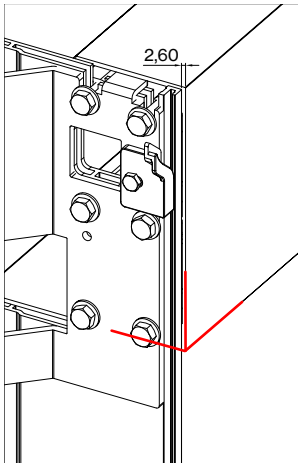

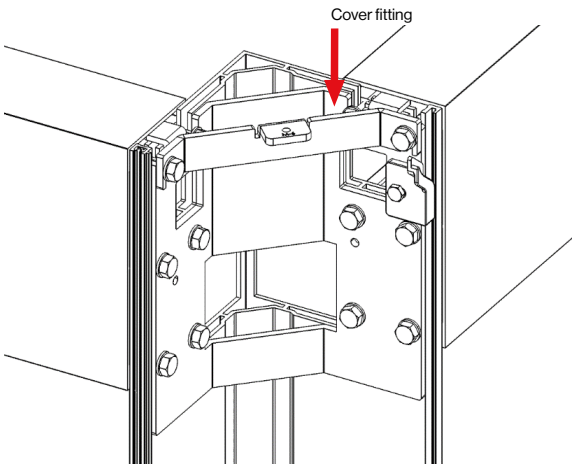

Repeat the procedure with the rest of the beams, placing the column first and then the beam.

When the two beams of a column are positioned, install the **cover fitting** and tighten the end screws to the specified torque.

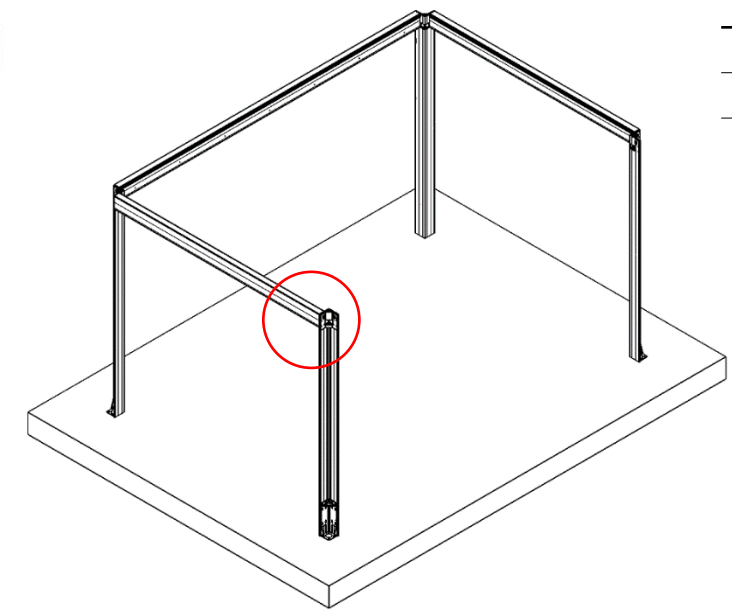

DIN 933 M8x16 A-70 screws

Thread	M8
MA tightening torque (Nm)	24

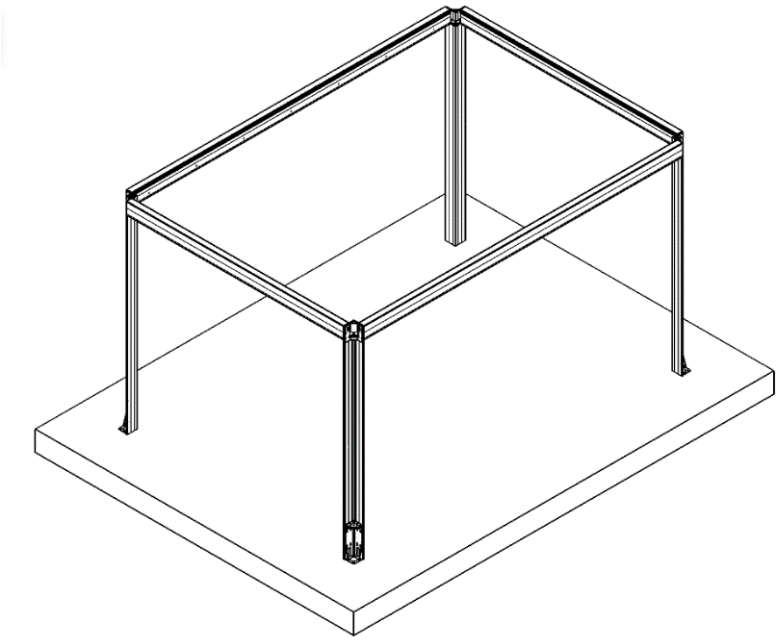

DIN 933 M8x16 A-70 screws

Thread	M8
MA tightening torque (Nm)	24

Check that beams and columns are level. If so, carry out the final tightening of all screws of the structure, according to the specifications provided in this manual.

Finally, fix the structure to the floor according to the specifications in section 1.1 Installing the fixations.

If the beams are not level, see section 2.2 Levelling the structure.

2.1.1 Combination with closed column

1. Assembly of beams and columns.

The beams are connected to the closed columns by means of four washers, four DIN 933 A2 M8x40 screws and two ULS (ISO 7380) A2 M6x16 screws.

To do this, unscrew the gutters that are screwed to closed columns.

Follow the screwing sequences indicated in the image.

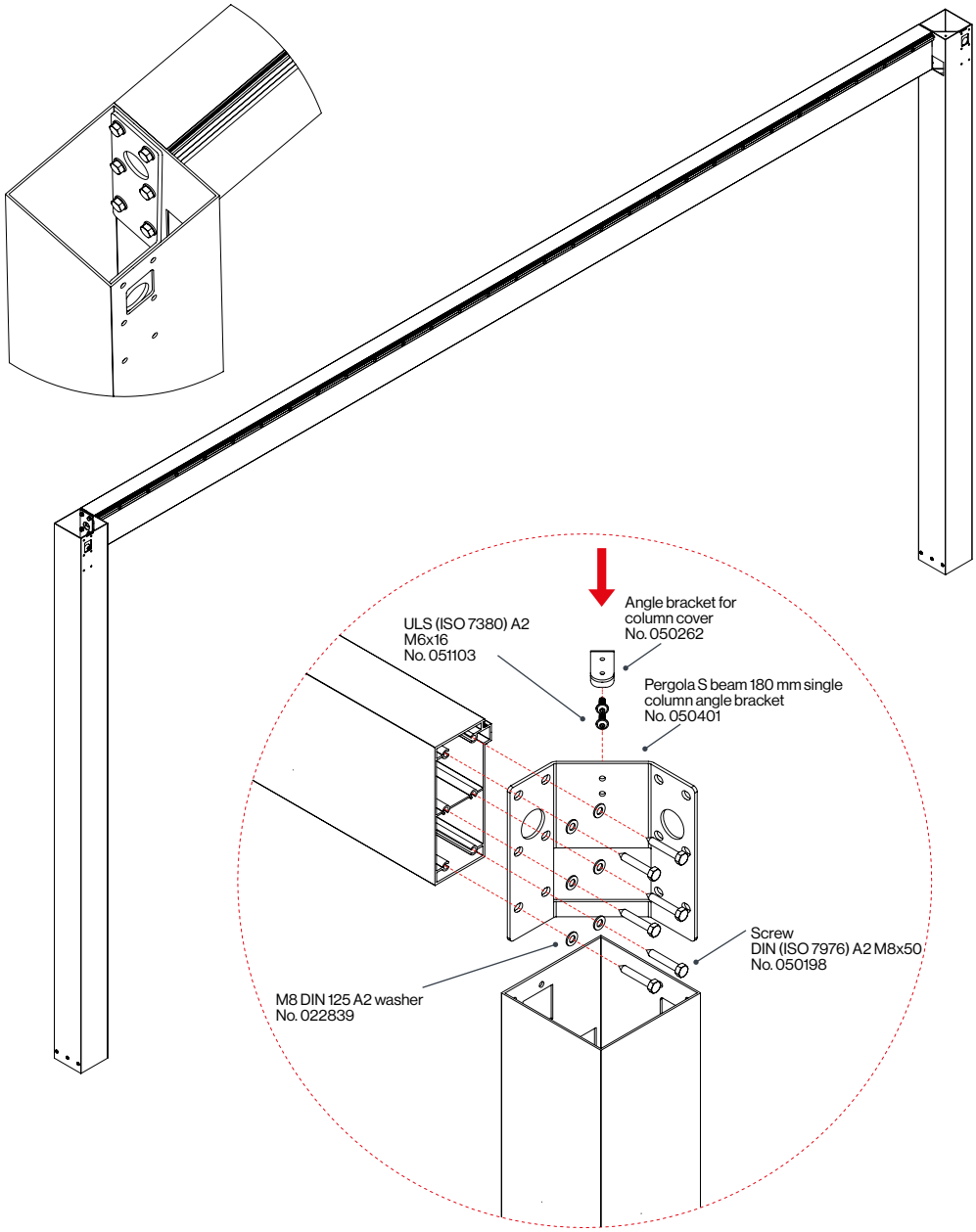

2. Fixing the inverted "u" profile to the floor

With the inverted "U" profile already mounted, fix it to the column bases of the foundation using the (ISO 7380) a2 M6x16mm screws.

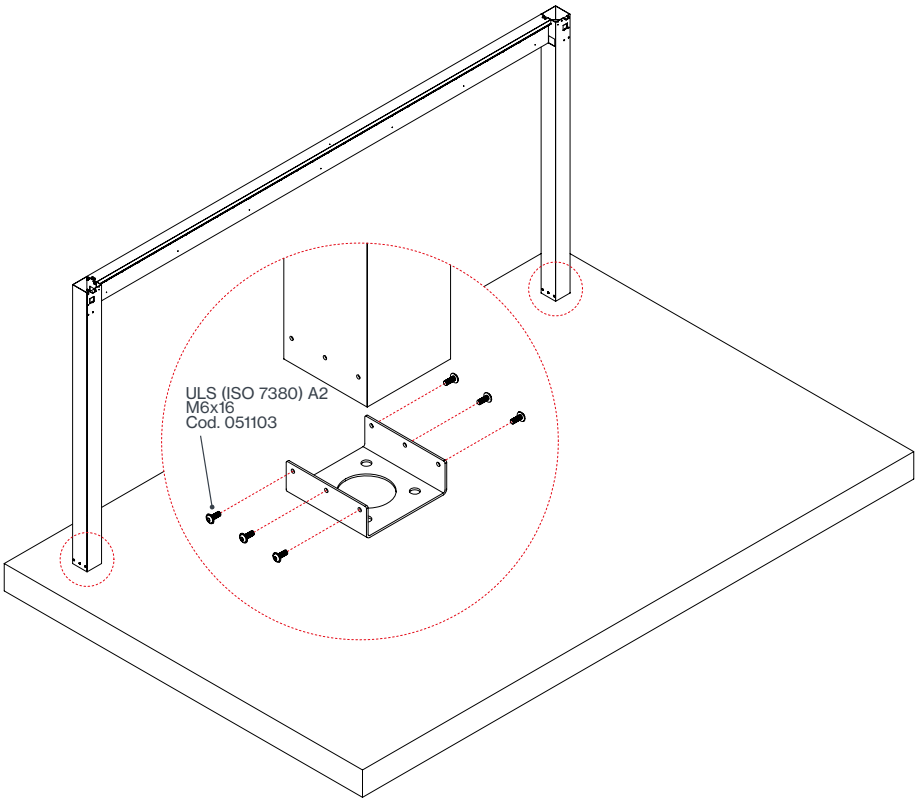

3. Installation of cover fittings

With the structure assembled, we will install the fittings for the top covers of the closed columns.

Tighten and do the final adjustment of all the screws in the framing brackets.

Important

Do not install the internal reinforcement until the entire gutter has been installed through the foundations, if necessary.

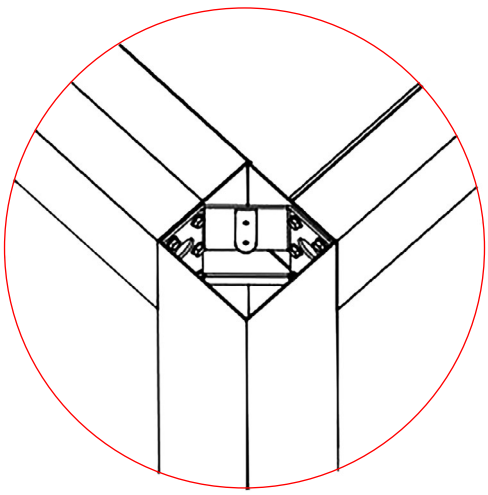

2.2 Levelling the structure

If, once the structure is anchored, the beams are not level,

loosen the 8 screws connecting the base to the column, so that the column slides over the base. It is important not to remove the screws.

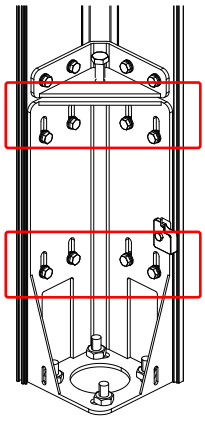

Screw in the M12 screw to raise the column until the beam is level and retighten the 8 base screws.

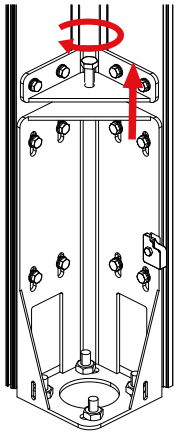

At the end of the assembly after section 6.1 Trim cover. When the height of the column is adjusted, two trim pieces are attached to the base. To fix the trims, they are sealed with silicone.

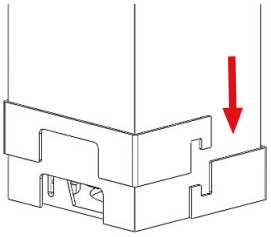

2.3 Joining the surface manifolds

Apply the included sealant between the mating faces of the clip-on adapters or **opening** and **closing** beams, and their respective clip-on manifolds. Clip the opening and closing manifolds (same profile, just in an inverted position). You will possibly need to use clamps or wooden plugs to help you with the clipping.

Important

Do not bypass this step, it is very important to seal the manifold joint properly (sealant provided).

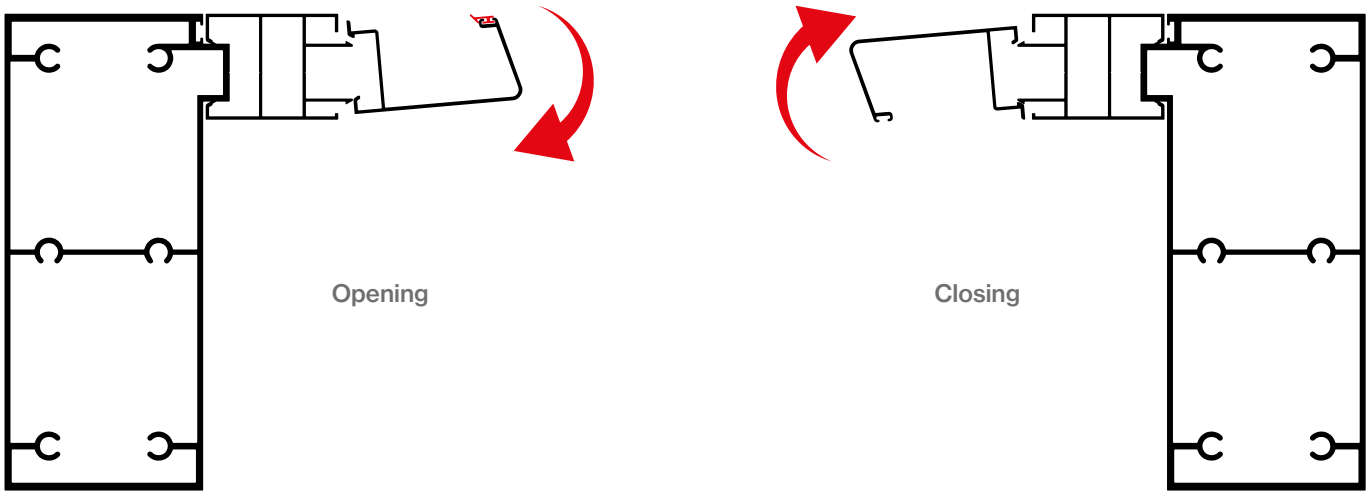

Important

Create a groove at the ends of the opening manifold, before proceeding with the installation, (use a hammer and a flat screwdriver).

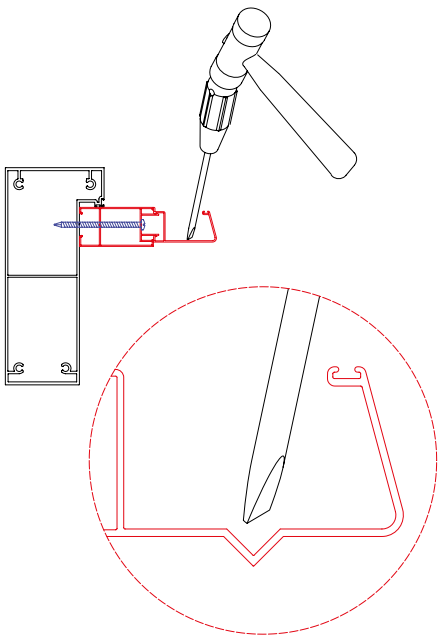

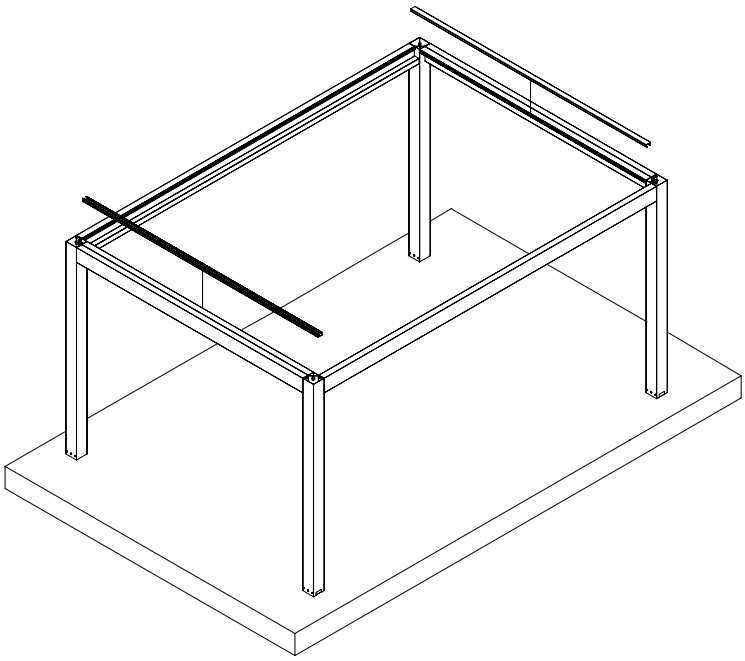

2.4 Installation of gomme parts

Apply the included sealant between the mating faces of the clip-on adapters or **opening** and **closing** beams, and their respective clip-on manifolds. Clip the opening and closing manifolds (same profile, just in an inverted position). You will possibly need to use clamps or wooden plugs to help you with the clipping.

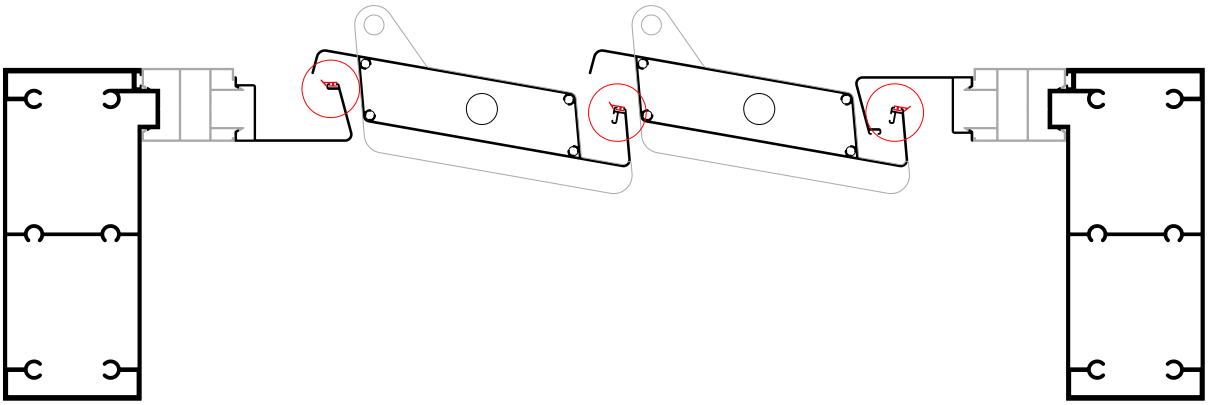

Installing gomme on the clippable opening gutter.

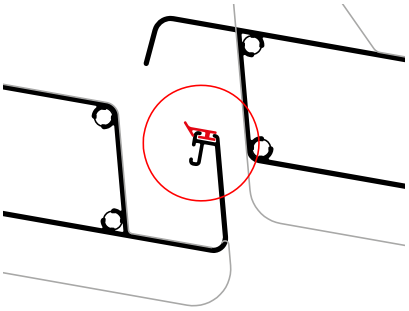

Installing gomme on the last (closure) slat.
Installed in the opposite way to the rest of lasts.
The clippable closing gutter does not have gomme.

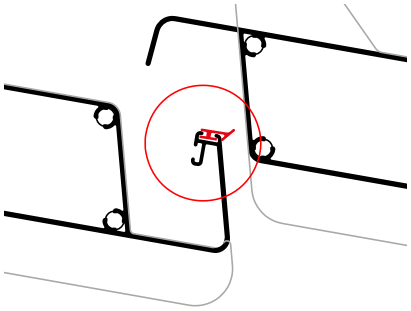

Installing gomme on the slats (150 slat step)

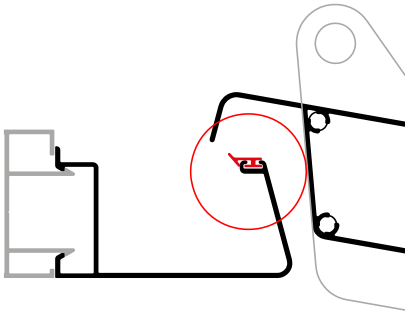

Installing gomme on the slats (150 to 160 slat step)

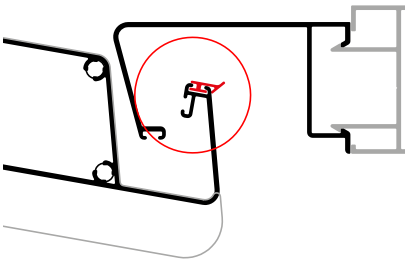

3. Drainage

3.1 Installation Profilé “U”

1. If the gutters have been removed for the installation of the beams, they must be replaced. Start by installing the “U” profile with the pre-mounted motor on the **left** beam. To do this, it will be necessary to insert the profile end through the pre-drilled draining hole in the B column. Install the “U” profile on the other side following the same procedure.

The aluminium profile of the "U" gutter must fit approximately 3.5 mm into the column on each side. It is important that the gutter is centred on the beam and that the same gutter spacing is used on both columns.

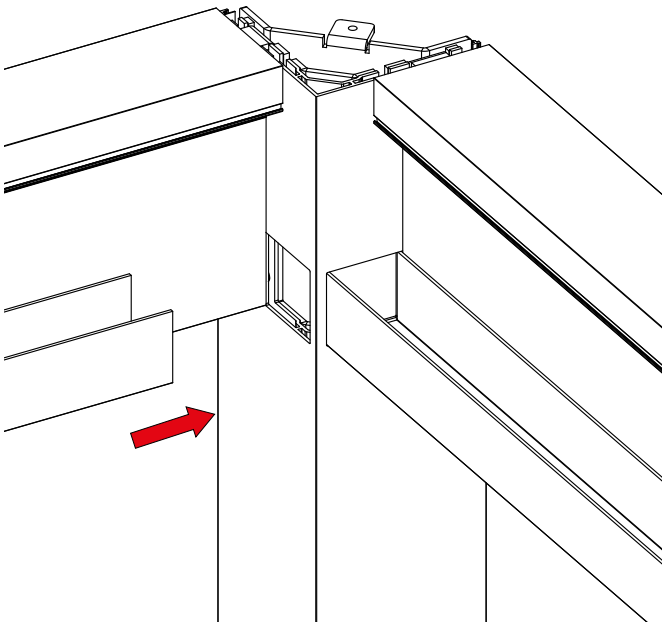

Check that all the “U” profile holes match the M6 machined ones on the beam. If all of them match, apply the sealant between the “U” profile and the beam after screwing the profiles with the USL (ISO 7380) A2x16 screws.

Use the sealant provided to seal the “U” profiles to the beams and the joints that could suffer water leaks.

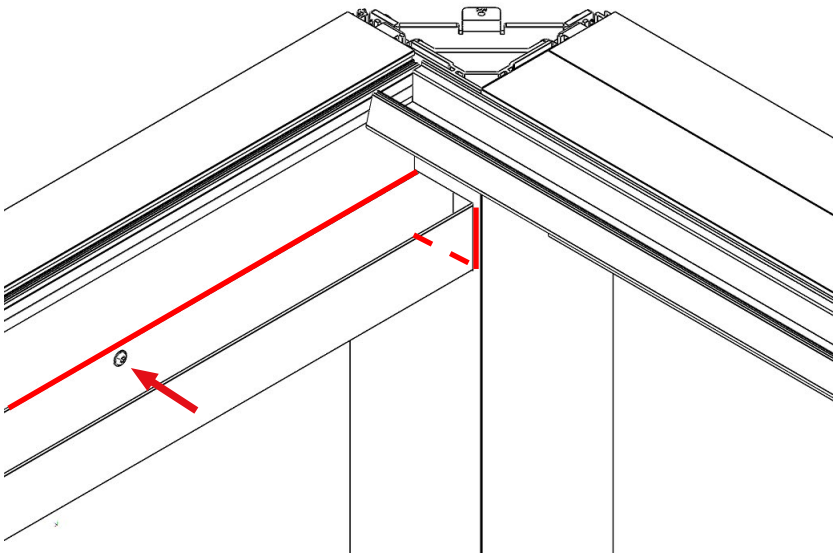

3.2 Installation of drainage parts

Before starting the installation, it is important to clean the drainage parts and gutters so that the silicone adheres perfectly to the surfaces.

Important

Be very careful when installing the drainage pieces in the open columns, so as not to make any mistakes that could affect the water channelling. Make sure all the joints are well sealed with silicone sealant.

1. Gutter extensions

These parts are placed at the ends of the U-shaped channel profiles.

The number of parts used will depend on the number of gutters entering the column: one piece for one gutter or two pieces for two gutters.

Follow the steps below to install the parts:

1. Apply a large amount of silicone in the grooves of the 3 outer faces of the piece *(marked with red arrows)*, so that when the piece is put in place, the silicone will overflow and create a joint between the piece and the gutter, preventing the passage of water.

The entire surface marked in blue must be covered in silicone.

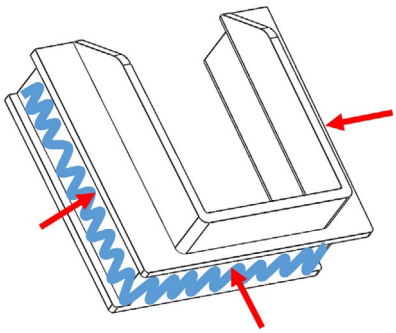

2. Install the piece into the gutter from the inside of the column, taking care not to remove the silicone in the process.

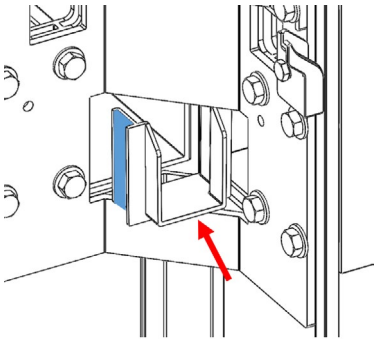

3. Once the part has been fitted, it should meet the end of the gutter, as shown in the picture.

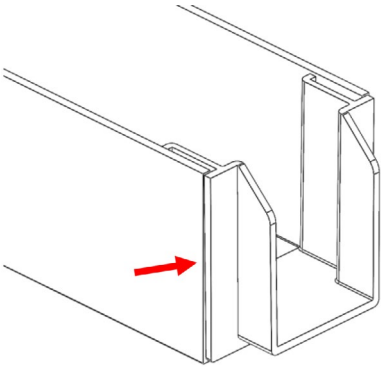

4. Press on the 3 sides of the part: bottom, left and right *(marked with red arrows)* to seal the part against the gutter.

The silicone, applied previously, must overflow through the free spaces between the part and the gutter *(marked in blue in the image).*

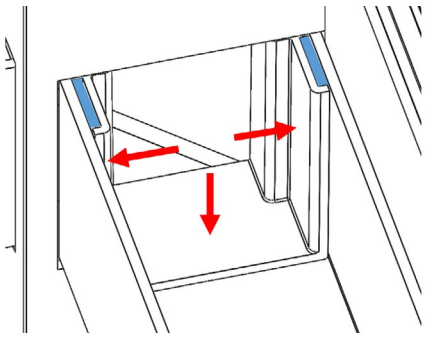

5. The corner between the extension piece and the gutter must then be sealed.

To do this, apply silicone *(lines in red)* and go over it, making sure that no gaps are left unsealed.

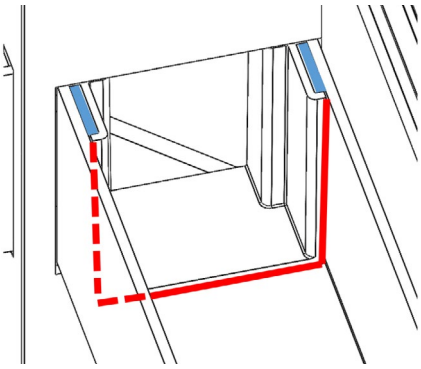

6. Repeat the process with the other gutter extension piece if required for the column assembly.

To insert it, rotate and place one end behind the extension already in place and then insert the other end of the piece, taking care not to remove the silicone marked in blue in the drawing.

Finally, repeat installation steps 3 and 4 above.

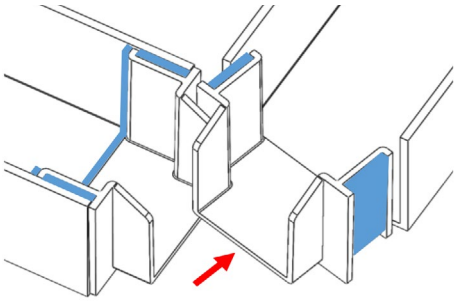

7. Results.
(Silicone marked in blue)

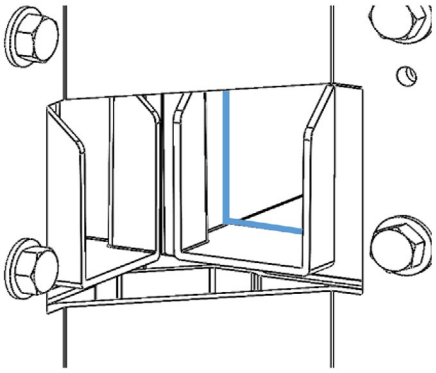

2. Collecting tray

Once the gutter extensions have been installed, the collecting tray should be installed, which will be necessary in the following cases:

When a **mitre** is required to connect the gutters of two adjoining beams and to allow the passage of water.

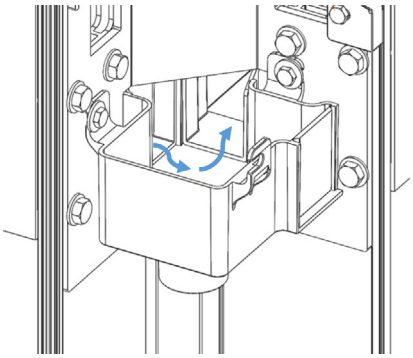

• When the system is channelled through the foundations and there is a drain in the accessible column.

• When the drain is free draining, but the automation systems and the drain are located in the same column.

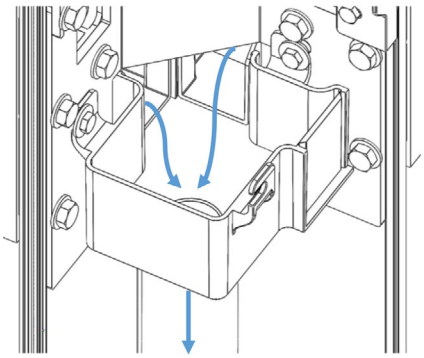

Follow the steps below to install the tray:

8. Remove the walls on the part as necessary to make way for the gutter extensions.

A cutter should be used to cut out the part, according to the following 3 options:

Option 1

Cut out the underside: when a conduit pipe is placed in the column.

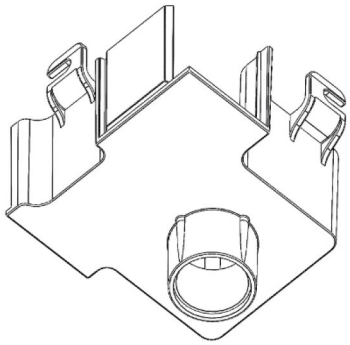

Option 2

Cut out one side: when only one gutter is being fit into the column. Choose the right or left side.

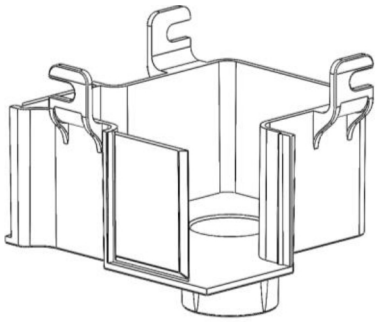

Option 3

Cut out two sides: when two gutters are being fit into the column.

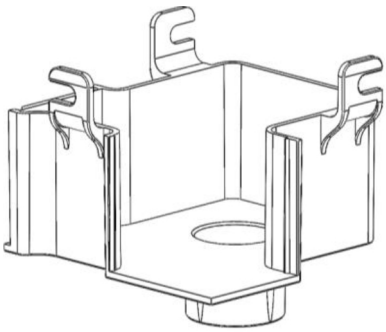

9. Place the collecting tray under the gutter extensions.

Screw into the reinforcement bracket using two DIN 933 M6x10 screws and two DIN 9021 A2 M6 washers.

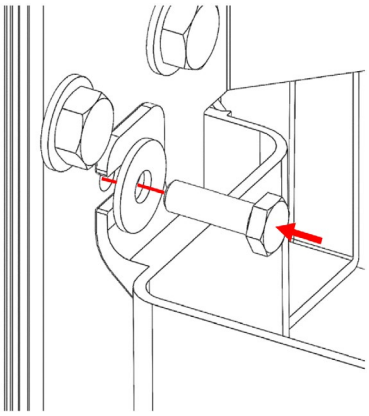

10. Seal all the joints between the gutter extensions and the collecting tray (marked in red in the picture) with silicone.

Look over it to make sure that no gaps are left unsealed.

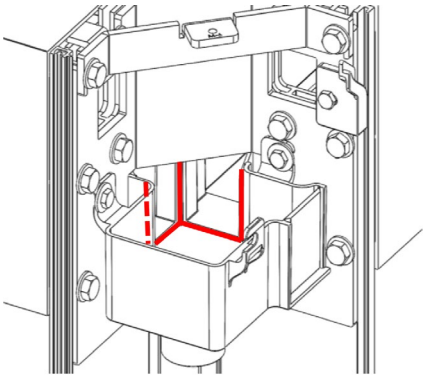

11. Seal all possible joints on the parts, aluminium profiles and column reinforcement brackets.

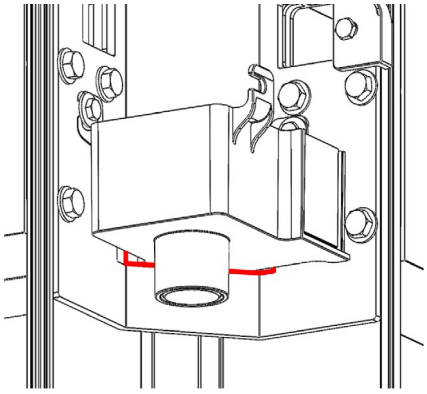

12. Finally, fit the drainage pipe to the corresponding collecting trays, according to the descriptions above.

To do this, apply silicone or PVC adhesive to the pipe and the collecting tray, then fit them together.

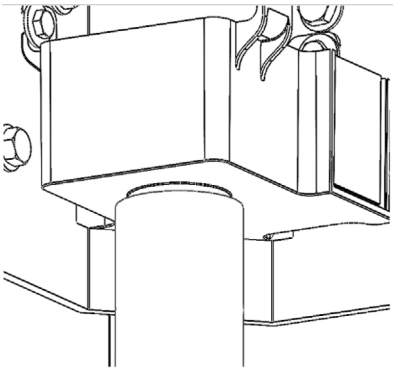

Important

Make sure all the joints are perfectly sealed with silicone and that there are no gaps that could allow water to enter between the parts and the profiles.

Instructions

Video showing silicone sealing of drainage parts

	Scan the QR code with your mobile device or click to access.

3.2.1 Drainage channel closed column

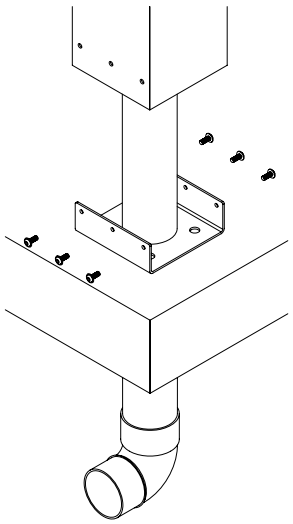

When the closed column is channelled through the foundations, start by installing the column fixings. Calculate the length of the 75 mm PVC drainage pipe, depending on the height of the pergola and the height at which the collecting tray will be installed.

Please note that the tray must be installed at a minimum distance of 250 mm from the top of the column; insert the drain pipe through the top of the column and connect it to the bottom drain of the foundations.

Then insert the collecting tray (by tilting it) and position it on the tube, joining the assembly with the joint adapter.

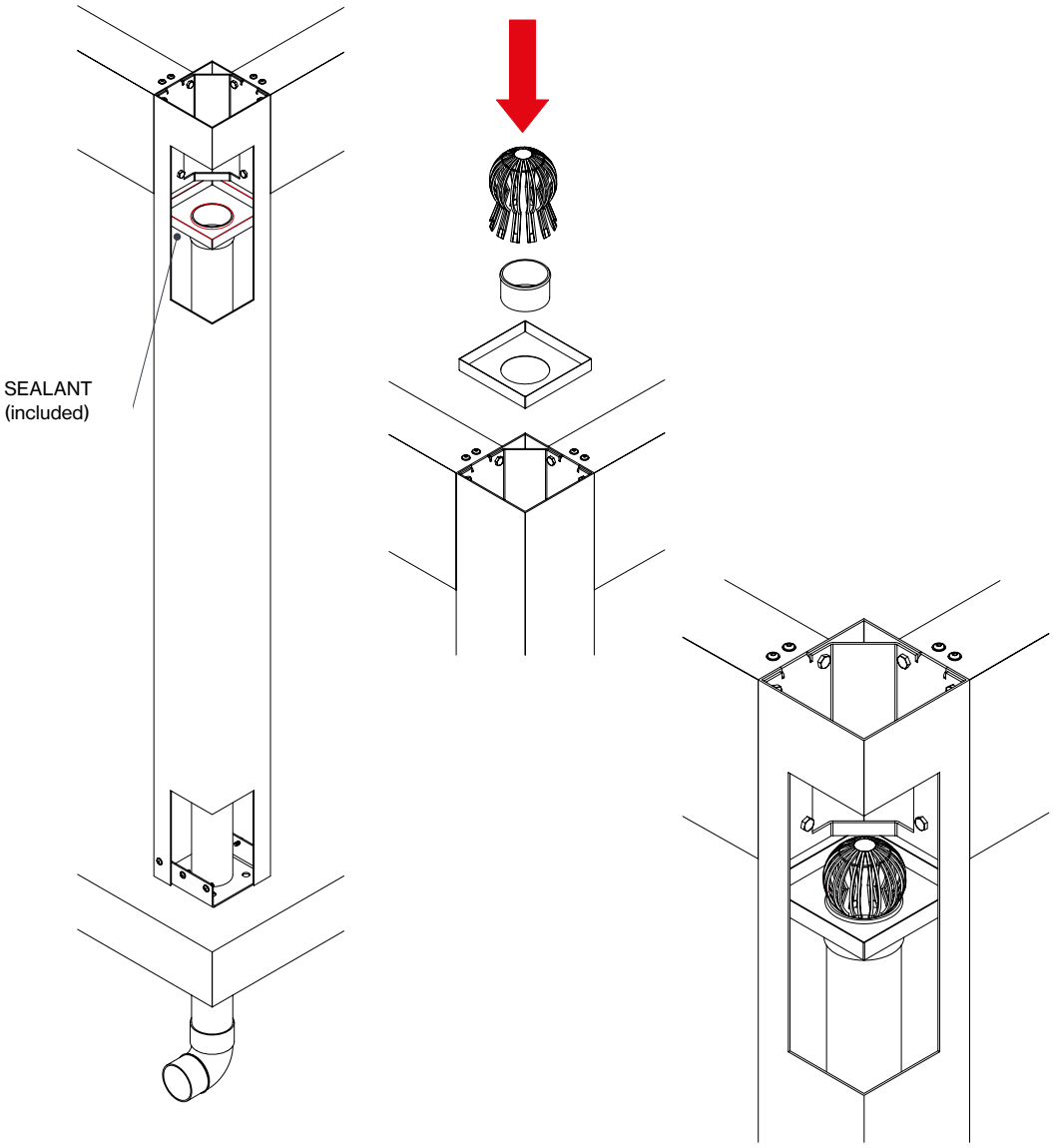

Finally, apply the sealant (included) all around the perimeter of the collecting tray and the adapter, as shown in the picture (sealant in red), and insert the universal leaf guard into the adapter.

4. Installing the slats

4.1 Installing the slats

With the structure assembled, and before installing the slats, fit the 16.8x11 mm anti-friction bushings.

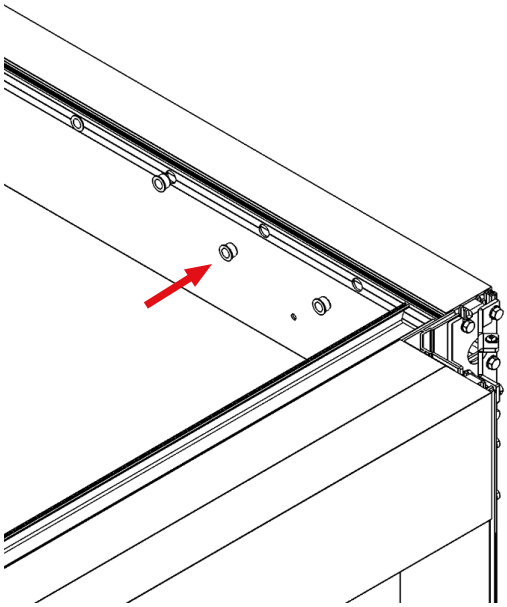

To install the slats without LED you will have a set of O-210 pivot system caps, integrated by a 16,4x25mm plastic cap and a retractable stainless steel axle.

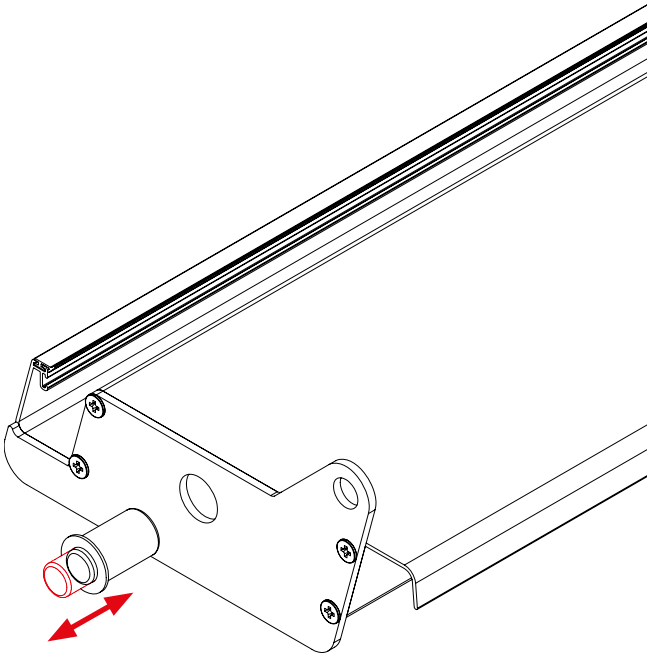

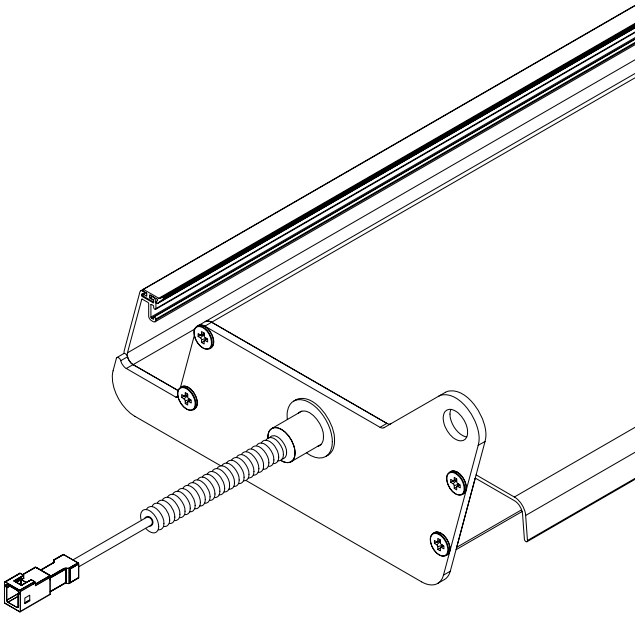

The slats with LED come already pre-installed on one side with a hollow axle. The LED connector comes through this axle and it has a protection spring. The O-210 retractable axle needs to be installed on the other end.

Important

Pay attention when installing the slats so there are no errors or confusion in their placement, opening, closing, LED slats, etc.
If it was necessary to remove any of the slats, follow the steps described in Annex A.

Start installing the slats from the opening side and from the top part of the pergola.
Insert the slat axle into the left beam, lower the right side at the same time you insert the retractable axle into the end cap and insert it into the anti-friction cap of the right beam, so the slat is finally in place.

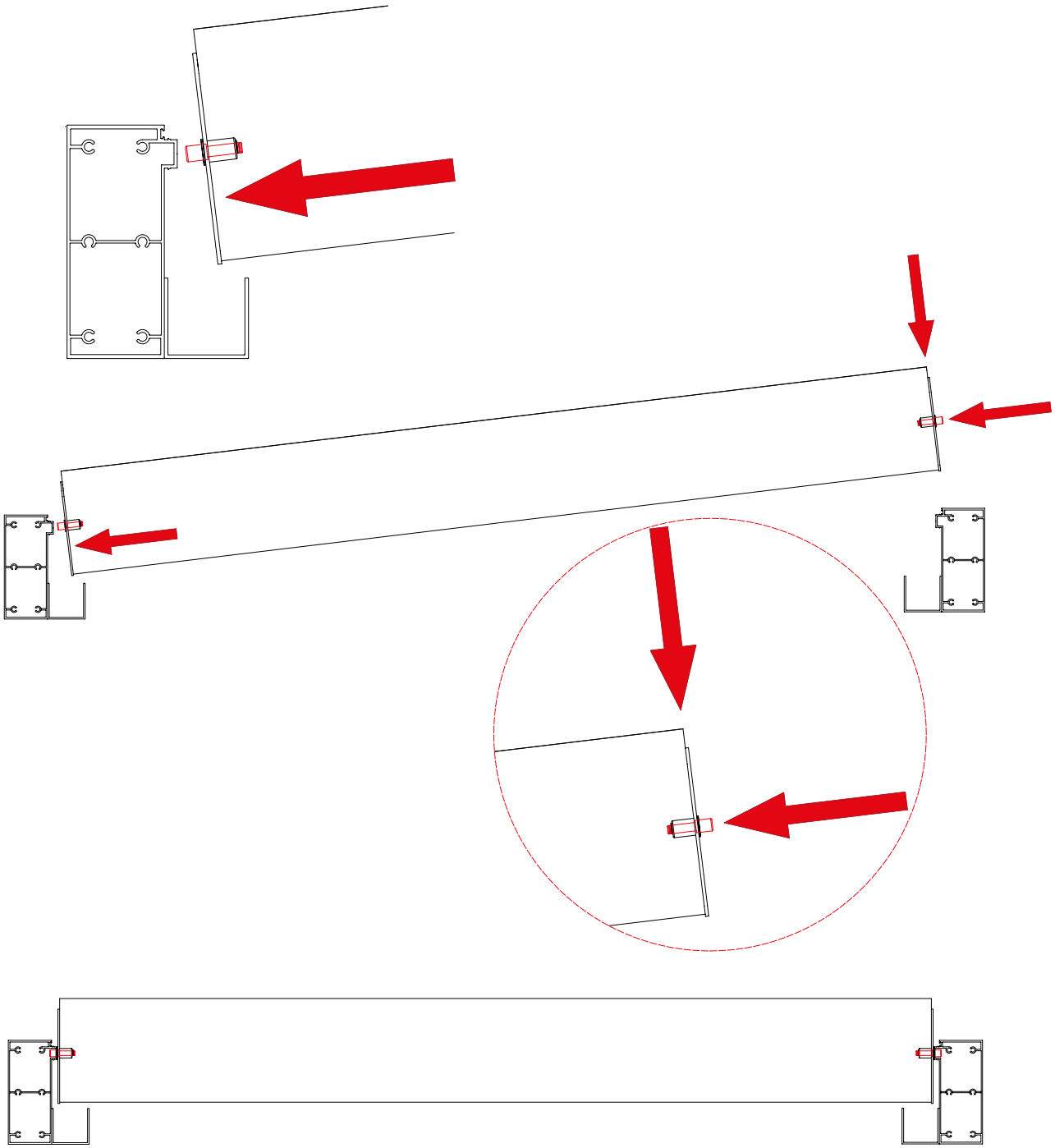

When reaching a hole for LED slats, connect the connector and insert it into the beam (as shown in the images below).

As for the other slats, the installation is the same, inserting the connector axle into the beam with the LED installation and the retractable axle into the other beam.

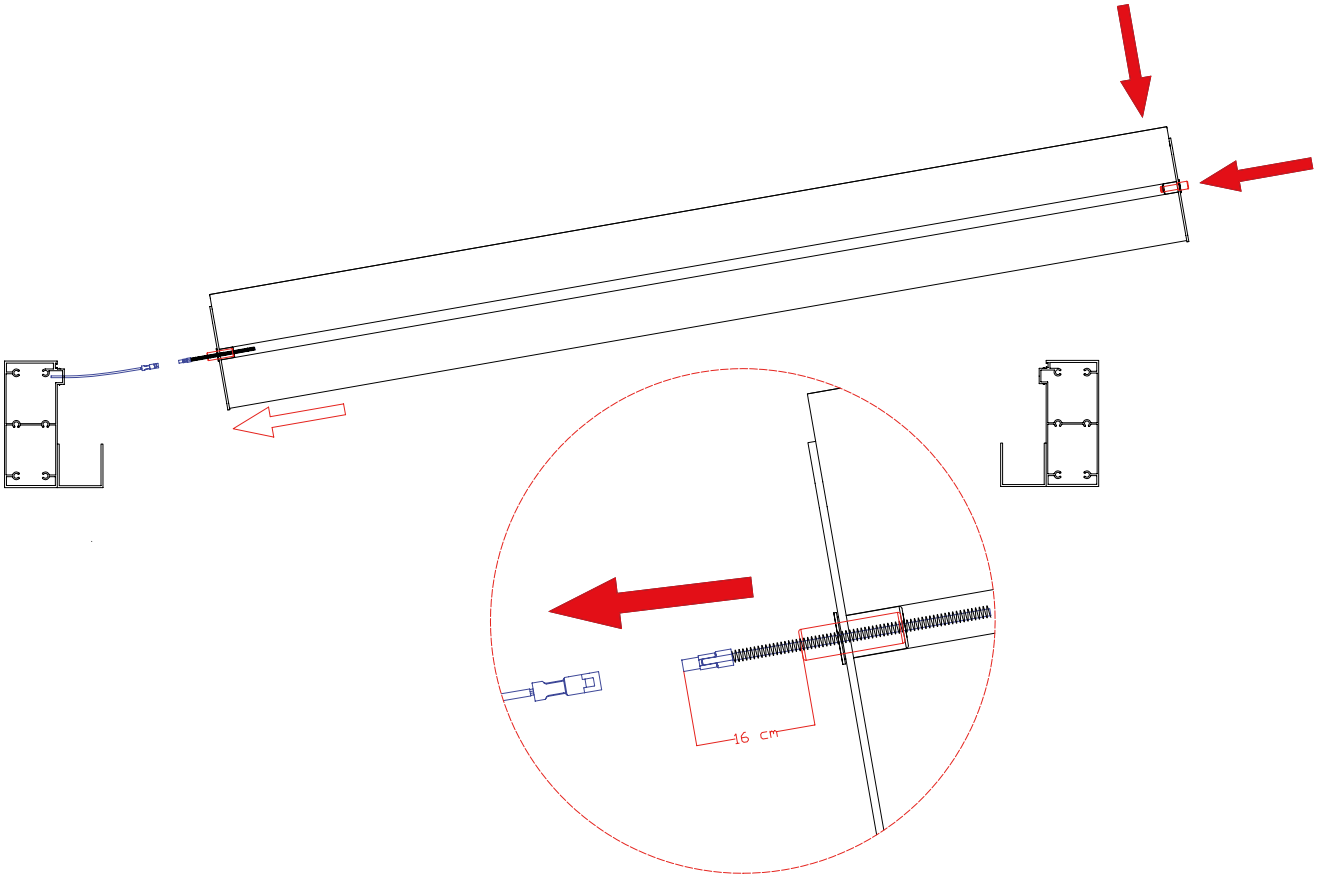

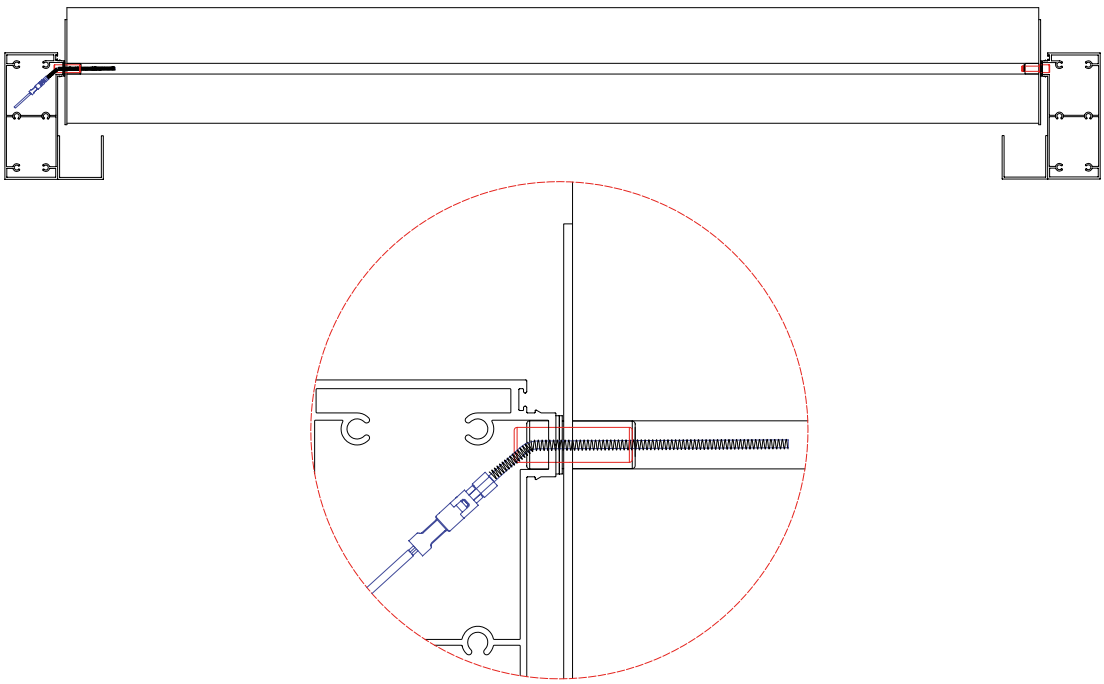

4.2 Installing the transmission plate

Gutter extensions

With the slats already in the structure, install the two transmission plates in the slat end caps. One of the slats will include an integrated support with a motor fixing stud. It is necessary to know the side of the pergola where the motor will be installed, so the plate can be mounted on that side.

Install the two plates simultaneously if possible. Start by fixing the first, the last and the centre slats to the transmission plate. This facilitates the rest of the installation.

Join the plates to the end caps with their corresponding ULS (ISO 7380) A2 M6x16 screws, 6.3mm rimmed plastic caps and M6 DIN 985 nuts.

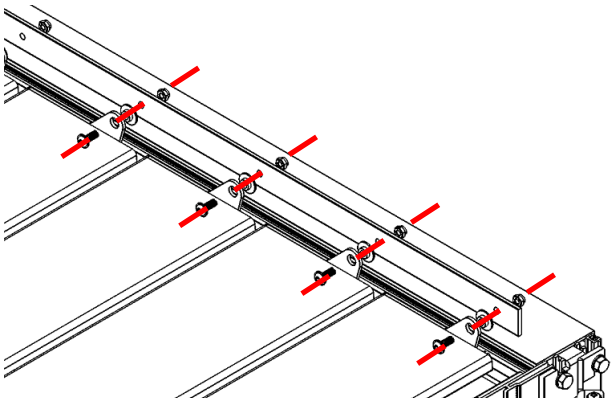

Important

When installing the plate to the slats, do not tighten too much the screw nuts, so they are firm without tightening. Thus the plate can perform manually the opening and closing movements with no friction whatsoever.

4.3. Motor installation

The motor location will be placed by default on the left beam and transmission plate (unless specified otherwise in the manufacturing order). Similarly the threaded holes for the motor bracket (1) will be on the beam and the transmission plate will include the motor operation delta plate with its stud (2).

Important

The threaded holes in the beam (1) may vary depending on the motor bracket used, but they will always be adjusted to it, regardless of the type.

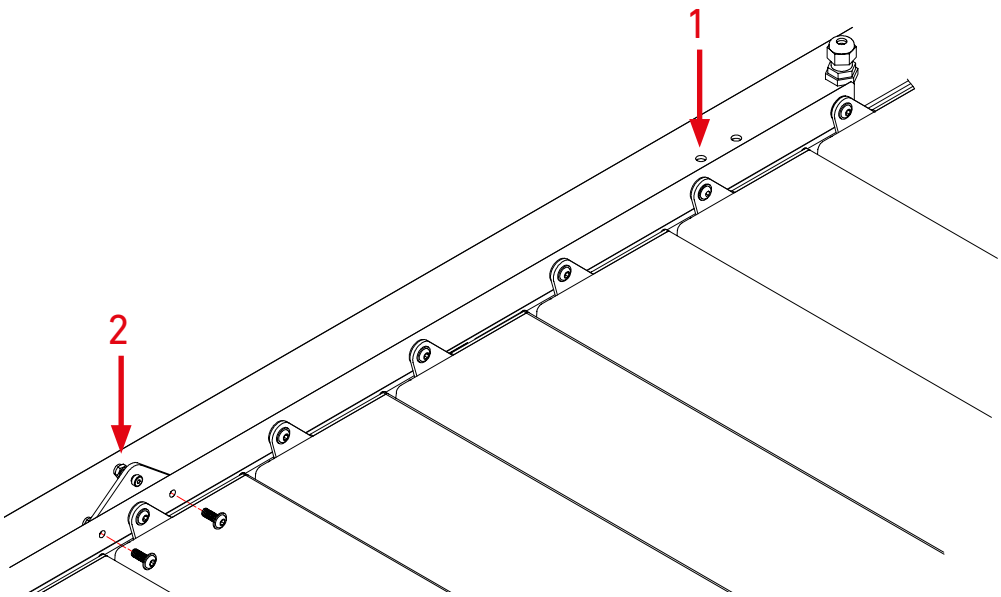

Steps to join the motor to the transmission plate.

1. Insert the tip of the motor piston rod into the operation delta plate stud.

2. Mount the nut on the transmission plate stud so the motor does not slip out.

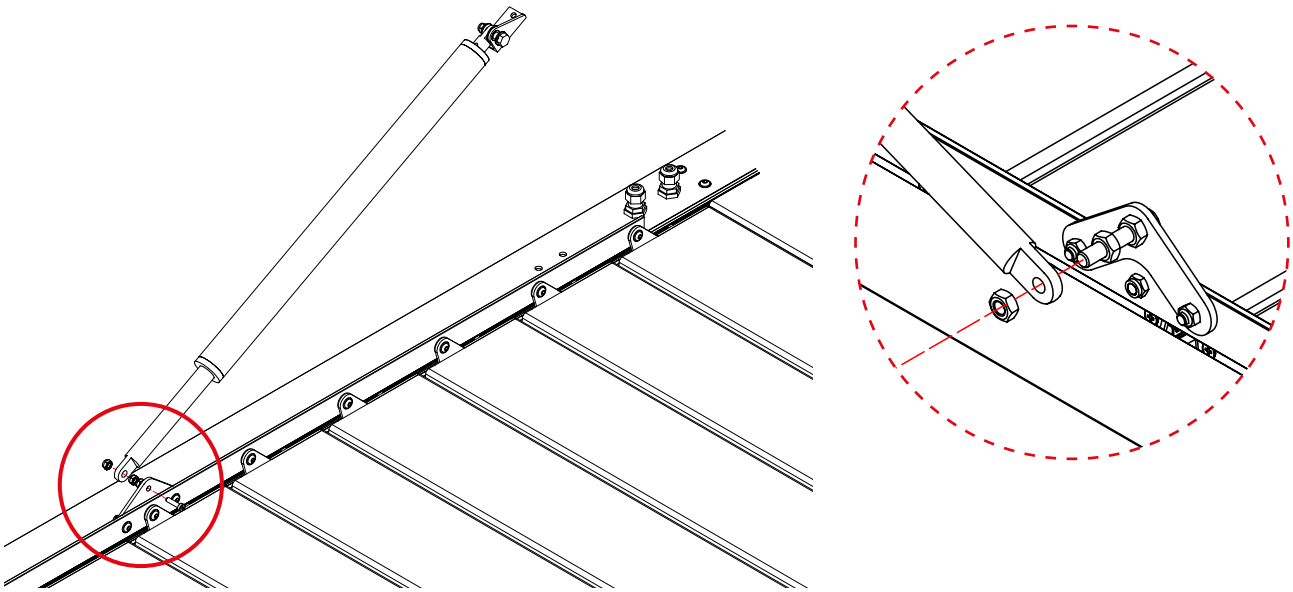

3. Move the motor opening the pergola until the bracket can be screwed on the beam threaded holes.

> **Important**
>
> The motor bracket could be different to the one in the image; however, the holes mechanised on the beam will be the correct ones for the bracket holding the motor at any time.

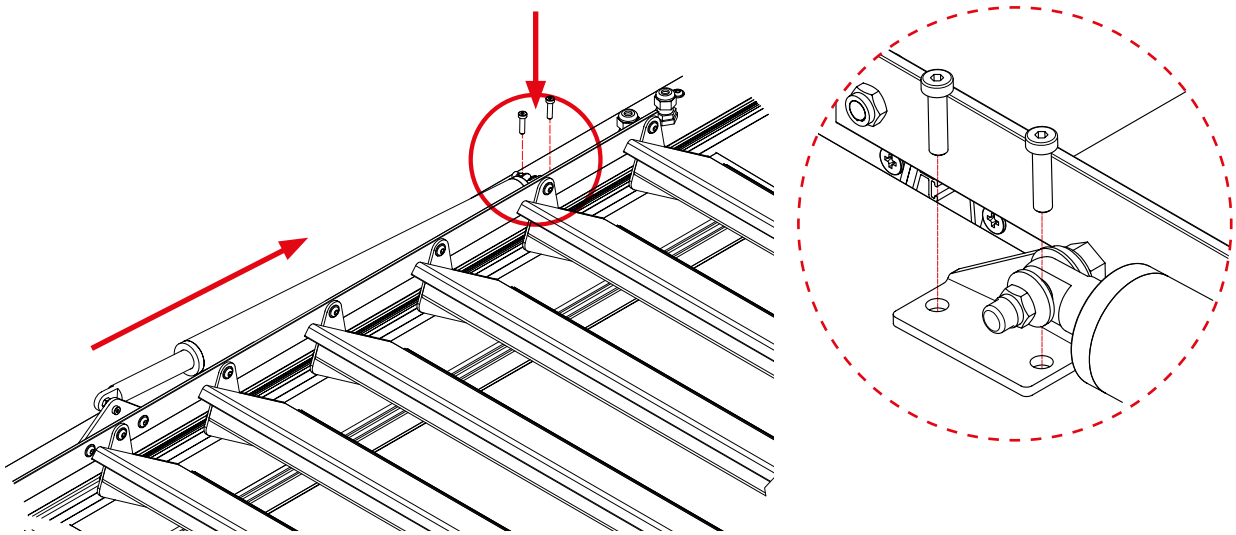

5. Electrical connections

Attention

The reception of the operators can be reduced or cancelled by the emission of frequencies that are issued in the same range as our automatisms.

The connection of the electrical installation must be in compliance with the rules and regulations of each country (Low voltage electrotechnical regulation). The perimeter cabling for the electrical and sound installations will be passed throuth the beam and column spaces.

The cable of the motor will go through the “U” profile towards the end where the electric connection will be performed, making a loop at the motor outlet and passing it under the support, so it cannot be pinched by the transmission plate when the assembly moves.

Complete the electric connections of the pergola according to the instructions and considering that both the motor and the LEDs run with a 24V voltage. For this reason, it is necessary to use the power soure and switchboard provided for the pergola operation.

For greater safety, it is necessary to ground the pergola.

Attention

It is recommended to place the electrical components on a column where the drainage of the pergola is not located. If this is not possible, seal all joints of the drainage parts of the column where electrical components are placed.

5.1 Teleco Documentation

	Scan the QR code with your mobile device or click to access Teleco Documentation

Teleco Automation System Documentation
1. Programming the automation systems
2. Quick guides
3. Motor configuration
4. Using the transmitter
5. Sensors
6. Supplier documentation

5.2 Somfy Documentation

	Scan the QR code with your mobile device or click to access Somfy Documentation

Somfy Automation System Documentation
1. Electrical connections
   1.2 Wiring diagram
      1.2.1 Wiring
      1.2.2 RTS programming (factory set)
      1.2.3 Electrical connection of the Bos io Louver Control Centre

5.3 Installing column-mounted automation systems

Below is a reference image for installing the automation systems in the open column.

The control units for the automation systems should ideally be attached to the column. If they are screwed in, make sure that the screws are the right length, so that they do not penetrate the outer face of the column.

If possible, it is recommended that the automation systems be placed in a column without drainage.

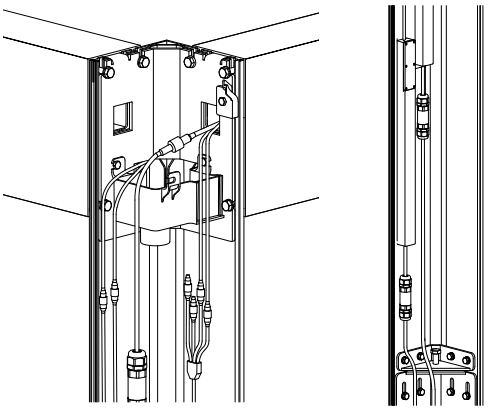

5.4 Perimeter LED installation

If the pergola is fitted with perimeter LEDs, an aluminium profile with an LED strip will be installed in the gutters of the pergola.

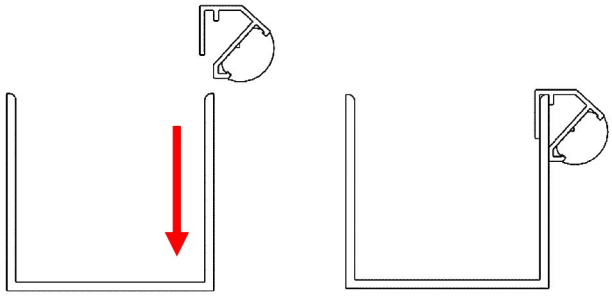

Fit the perimeter LED corner piece shown in the picture on the right to the **corners of the pergola with a column**.

The perimeter LED profiles should be 9 mm from the column.

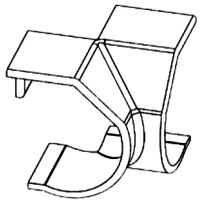

1.

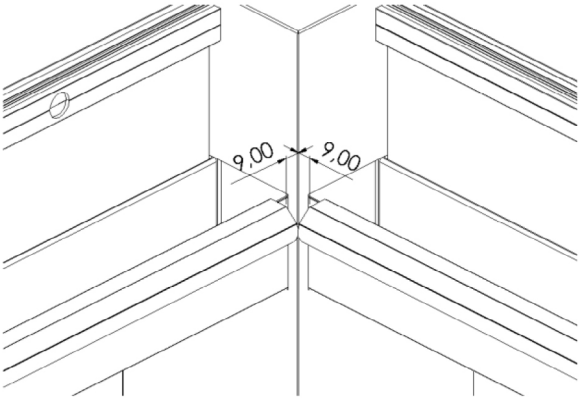

2.

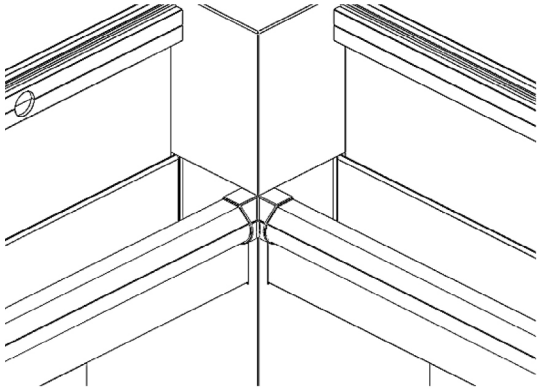

Fit the perimeter LED corner piece shown in the picture on the right to the **corners of the pergola with a mitre**.

The perimeter LED profiles should be 19 mm from the column.

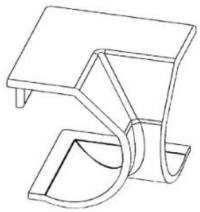

1.

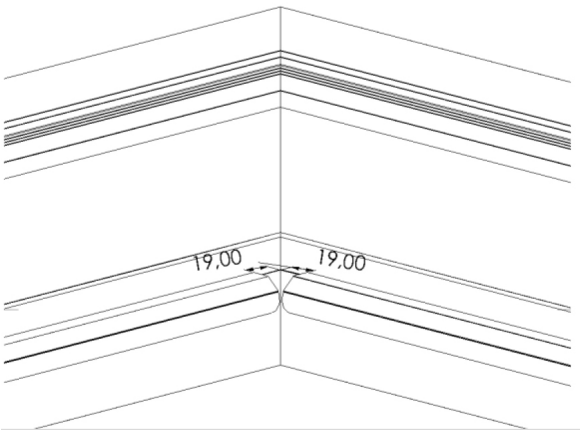

2.

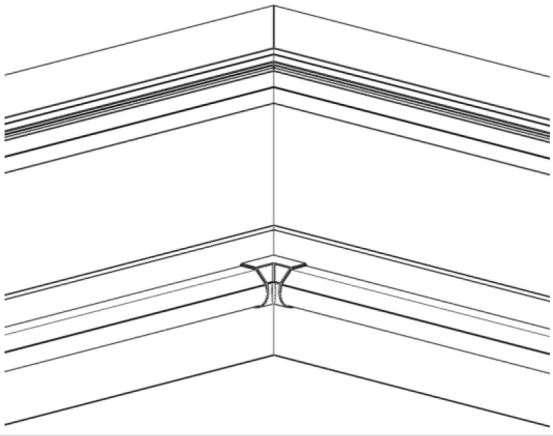

6. Installing column cap

Left-hand clipping

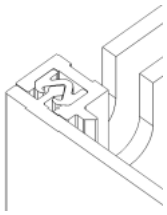

Right-hand clipping

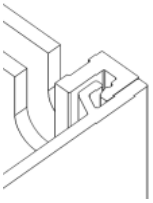

6.1 Trim cap

Position the trim profile in front of the column in the correct position, with the left-hand clipping on the left and the right-hand clipping on the right. On the lower part of the column, slide the trim profile over the lower coupling piece, fitting the profile between the piece and the column. (2)

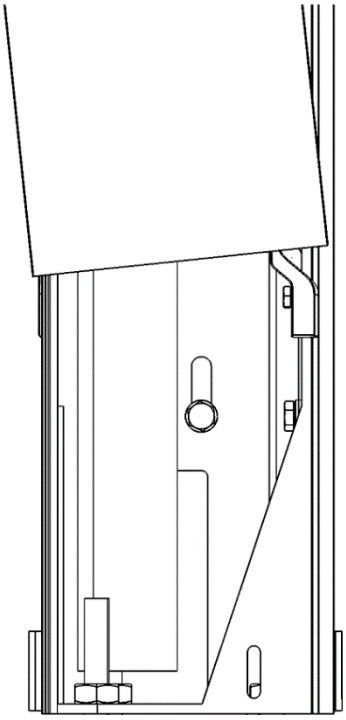

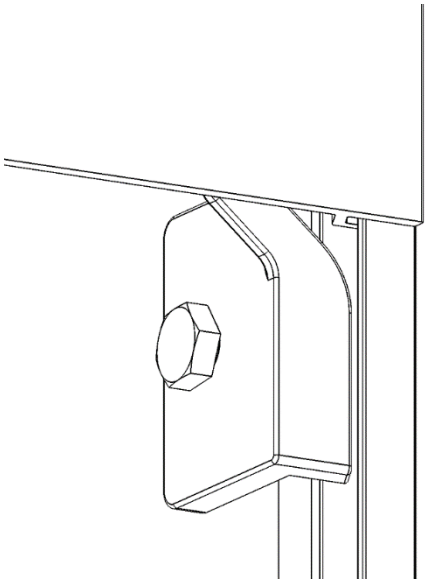

On the left side of the column, clip the profile onto the clipping rubber from the bottom to the top.

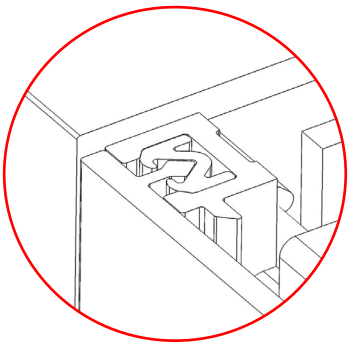

Slightly unscrew the screw on the upper part of the right-hand clipping piece of the trim profile in order to be able to put the profile in place. Then tighten the screws again until the column is completely closed.

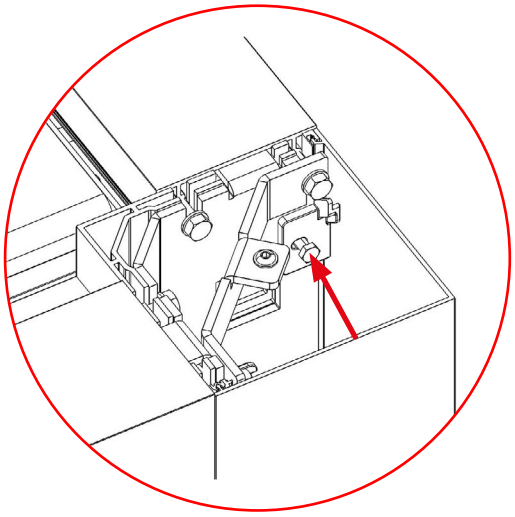

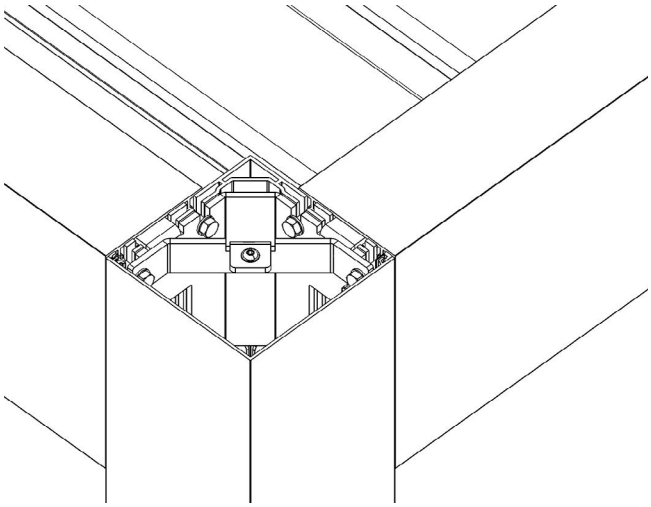

6.2 Top cap

After the electric connections are completed, installing the column caps is the last stage left. To do this, the caps will be screwed to the inner reinforcements using the ULS (ISO 7380) A2 M6x16 mm screws.

When all the column caps have been installed, it will be necessary to seal their joints with the sealant provided, as mentioned before, one of the caps has 3 glands to take the cables out to the switchboard.

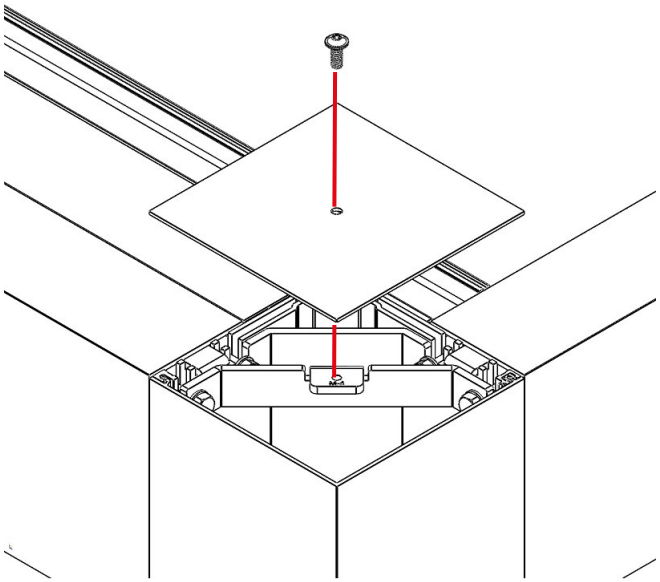

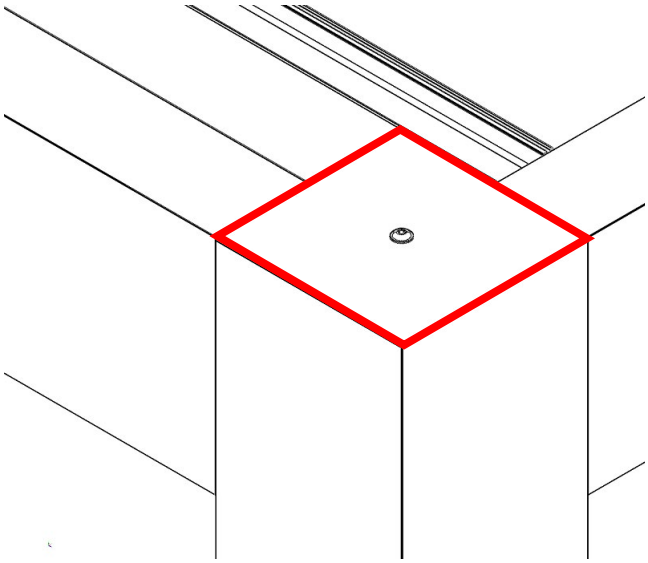

7. Maintenance

Before assembling, please read the maximum tightening torque for each type of screw, as indicated in this section.

For best use and extended durability of your pergola, it is recommended to carry out regular maintenance and services at least once a year, or even more often depending on the wind fatigue at the installation site.

To prevent corrosion, it is recommended to periodically clean gutters and sections with neutral soap. The minimum frequency is once a year, and must be increased for cloths exposed to aggressive environments (marine, industrial, airborne dust particles, etc.). It is important to rinse thoroughly with water, after using detergents, to avoid the formation of salts on the surface of the sections.

When properly done, this periodical cleaning removes from the surface of the cloth the exogenous agents that can attack the coating and aluminium, extending the life of the sections and their aesthetic performance.

Inspection of seals, revision of the electrical installation, as well as a review of the tightening of screws according to the tightening torques (standard metric thread) set forth in the attached table.

SCREWS HARDNESS CATEGORY 70

THREAD	**μges.**	**MA TIGHTENING TORQUE** (Nm)
M5	0,2	5,7
M6	0,2	10
M8	0,2	24

Annex I

Disassembly and disposal of the packaging and components of the product at the end of its useful life

Disposal of packaging

Important

The packaging must be recycled by the authorised professional who installed the product.

We advise you to recycle the product packaging responsibly:

• Please dispose of this waste in accordance with the current regulations:
-Directive 94/62/EC on packaging and packag- ing waste.
- Spanish Law 11/1997 of April 24th on pack- aging and packaging waste.

• Please sort the waste by separating each and every one of the various materials, to facilitate effective disposal of the packaging.

• Do not dispose of packaging materials together with other types of waste. Take them to a packaging materials collection point designated by the local authorities.

• In order to minimise the environmental impact of packaging and packaging waste, it is necessary to define the composition and nature of the packaging of our products to recommend their best disposal.

Paper and cardboard:
In waste management, the recycling of paper and cardboard plays an important role, because up to 70% can be reclaimed. The disposal of paper and cardboard can be do through various channels such as collection by private operators or delivery to waste treatment plants.

Plastic:
The recycling of plastics has many advantages for the environment and therefore benefits the quality of life of everyone, contributing to a greater saving of raw materials as well as natural, energy producing and economic resources. The disposal of plastic can be done by private operators or delivered to waste treatment plants.

Bubble wrap:
This is made of low density poly- ethylene, which makes it 100 % recyclable. For optimal disposal, please deliver any waste comprising this material to plastic waste treatment plants.

Our commitment to the environment

One of **Saxun's** objectives is to maintain socially responsible behaviour. This commitment to the environment implies continuous improvements in the measures that are adopted to combat climate change.

Promoting responsible care of the environment, complying with the legal and regulatory requirements applicable to our products and promoting energy saving in all our projects are measures that are essential for us to achieve our objectives.

Disassembly and removal of the product

When disassembling this product, a number of precautionary measures must be taken. Observe the following warnings and instructions. Please contact your supplier with any queries.

Disassembly may only be carried out by experienced fitters. This manual is not intended for DIY enthusiasts or installers in training.

For more information on these disassembly instructions, please refer to the chapters regarding installation in this manual that contain diagrams and detailed information.

Warning

Always act with care. Use appropriate tools which are in perfect condition.

- **Étape 1**
Disconnect the electricity. ¡ATTENTION! Shut off the energy supply before disconnecting any cables.

- **Étape 2**
Unscrew the screw on the top cover of the column and remove the cover.

- **Étape 3**
To remove the side cover, unscrew the right-hand clipping piece and open the left-hand clipping of the rubber bands from the top.

- **Étape 4**
Dismantle the motor.

- **Étape 5**
Dismantle the transmission plate.

- **Étape 6**
Dismantle the slats.

- **Étape 7**
Dismantle the drainage channels.

- **Étape 8**
Dismantle the rubber parts.

- **Étape 9**
Dismantle the pergola structure by disassembling the interior brackets that fasten the beams to the columns, and the wall fixtures, if there are any.

- **Étape 10**
Dismantle the columns and their fixtures.

Attention

Make sure that you dispose of all the product's parts according to the nature of the material.

Components	**Galvanised Steel**	**Stainless Steel**	**Aluminium**	**WEEE**	**Plastic**	**Textile**
Cables and LED lines				•		
Caps					•	
Switchboard				•	•	
Brackets		•				
Upper brackets		•				
Rubber seal					•	
Motor		•		•	•	
Profile			•			
Motor brackets		•				
End plates			•			
Screws		•				

Our products are mainly made of recyclable materials. It is advisable to be informed about the recycling or disposal systems provided for in the current regulations in your country for this product category.

Important

Always act with care. Please only use suitable tools that are in perfect condition.

This symbol means that the product must not be disposed of together with household waste as it must be collected separately for recovery, reuse or recycling in accordance with local regulations.

In compliance with European Directive 2012/19/EU, waste electrical and electronic equipment (WEEE) can become a serious environmental problem if not managed properly. The Directive provides the general framework valid throughout the European Union for the disposal and re-use of waste electrical and electronic equipment.

At the end of the service life of the electrical or electronic equipment, it must not be thrown away together with other types of waste. They can be delivered to the specific centres regulated for this purpose by the local authorities.

The effective separation of waste will avoid negative consequences for the environment and health that could result from poor waste management or inadequate waste disposal.

Important

By complying with this directive, you will be acting in favour of the environment and will contribute to the conservation of natural resources and the protection of health.

Local regulations may impose signi cant penalties for illegal disposal of the product.

The materials that our products are made of offer a great variety of environmental advantages

Galvanised steel

Galvanised steel is a type of steel which undergoes a certain treatment, at the end of which it is coated with several layers of zinc which protect it, avoiding oxidation. The recycling of zinc helps reduce demand for new materials and as a result generates considerable energy savings, being a metal that constitutes a very valuable and sustainable resource.

For proper recycling of galvanised steel, it is advisable to visit a metal waste collection centre.

Stainless steel

Stainless steel is an iron alloy containing nickel and chromium to protect against corrosion and rust. Its qualities include resistance to high temperatures and being a particularly strong material. Stainless steel is an infinitely recyclable “green material”. Its properties make it ideal for exposure to poor weather conditions.

Therefore, to ensure proper disposal of stainless steel, it is recommended that this material be left at a specialised waste collection centre.

Aluminium

Aluminium recycling guarantees an endless variety of environmental benefits. The use of recycle aluminium saves 95% of the energy used in its production in its raw state, and it can be recycled as many times as desired and is fully recoverable. Therefore, the recycling of aluminium is both technically and economically pro table.

Therefore, to ensure proper disposal of aluminium, it is recommended that this material be left at a specialised waste collection centre..

Cables

The recycling of electrical cables prevents the contamination that can come from these elements. Its re- cycling allows for the subsequent use of the copper, aluminium and brass from the cables, once they are separated from their plastic insulation.

Electrical and electronic waste must be taken to clean points for proper recycling

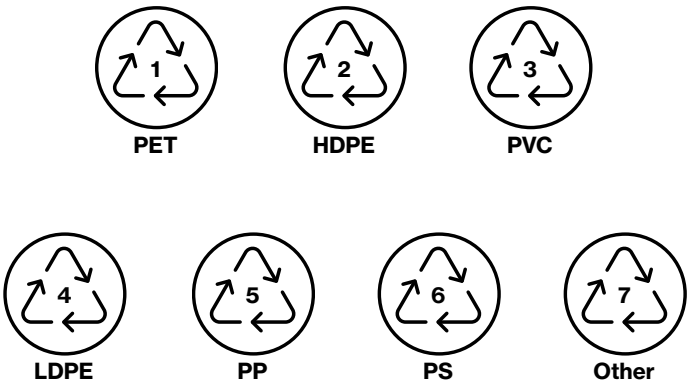

Plastic

Plastic recycling provides a sustainable source of raw material for the industry. Its reuse also significantly reduces environmental problems, as it is a non-biodegradable material.

Recycling reduces energy consumption and CO2 emissions, thus mitigating pollution and climate change.

There are several types of plastic, so to achieve optimal recycling it is essential to deposit them in clean points where the separation of the different types and their identification will take place.

Textiles

The use of textile waste is essential when we talk about recycling. Reuse of such waste helps to reduce the consumption of water and the gases that are released in the manufacturing process.

In order to encourage the proper disposal of textiles, it is recommended that they be left at a specialised waste centre where the different textile fibres will be separated.

Important

Follow the recommendations for effective product recycling. Remember that recycling is more than an action; it is the value of accepting responsibility

Annex II

Certificate of guarantee

The Saxun bioclimatic pergola is composed of a waterproof structure with adjustable aluminium slats, driven by a motor.

Its main structure is made of 6063 T5 alloy aluminium profiles, lacquered or anodised according to the technical specifications of the Qualicoat and Qualanod quality brands. This structure is totally self-supporting and can be dismantled, so that no type of work or construction is required for its installation.

Our pergolas, just like the rest of our products, are subjected to a variety of tests in our labs in order to check their resistance and behaviour in every type of circumstance.

Tests carried out following the requirements of international standards, involving parameters such as wind resistance and loads of rain or snow, demonstrate the excellent performance of our bioclimatic pergolas against the most adverse conditions.

The P-150 and P-190 pergolas were tested in accordance with the following standards, obtaining the following results;

Wind resistance:

P-150 et P-190	**Norme:** EN 13659	**Class 6 (Aprox. 112 km/h)** Tested up to 190 km/h, without breakage due to limitation of the test bench.

Rain load:

P-150 y P-190	**Norme:** EN 12056-3	**Class: (0.03 l/s max.)** torrential rain approx. 108 l.m2/h (structure + slat)

Snow load:

P-150	**Norme:** EN 1999 Eurocode 9 Aluminium structures projects.	**≤65 kg/m²** (Including own weight)
P-190	**Norme:** EN 1999 Eurocode 9 Aluminium structures projects.	**≤100 kg/m²** (Including own weight)

Maximum dimensions:

P-150	5.000 mm x 3.600 mm x 3.000 mm*	Approximate weight of **310 Kg**
P-190	6.200 mm x 4.200 mm x 3.000 mm*	Approximate weight of **485 Kg**

* Length (mm) X Width (mm) X Height (mm)

Warranty:

Saxun only guarantees these results in cases where the pergola has been correctly installed and assembled and properly maintained.

It may be possible for leaks to occur between the slats in the event of occasional heavy rainfall, as the sealing between the slats is not watertight.

The values stated in the calculations shall not be applicable if customers and/or installers not authorised by Saxun manipulate the equipment in any way.

The warranty period for Saxun pergolas is 3 calendar years from the date that the product is supplied, with the date being that indicated in the delivery note issued by GIMÉNEZ GANGA, S.L.U.

For more information about the Saxun warranty conditions and possible exclusions from the warranty, the Saxun Warranty Certificate is available in the general price list.

Client:	**Order/Quote:**

Prior to placement of columns		**OK**
	Squaring and parallel alignment of bases for anchoring to floor slab	
	Strength of attachment of bases for anchoring to floor slab	
	Accurate levelling of bases for anchoring to floor slab	

Prior to installation of slats		**OK**
	Strength of wall fasteners	
	Confirm accurate plumbing of columns	
	Confirm accurate levelling of beams	

Prior to final installation of motor		**OK**
	Confirm wires are correctly earthed in compliance with REBT	
	Visual inspection of electrical installation, loose cables, pipes, stuffing boxes, closing and sealing of boxes (motor cable)	
	Confirm correct insertion of all security screws (attachment of slat axes)	
	Confirm correct clipping of collectors and slat axes	
	Confirm correct functioning, (smooth and silent) when opening and closing manually, (before installing the motor)	
	Confirm proper sealing by applying water to critical points with a hose or bucket	
	Check tightness of all screws according to tightening chart, (except the transmission)	

During final installation of motor		**OK**
	Confirm correct operation of all motor manoeuvres, according to the issuer	
	Re-check and confirm that the drainage collectors, channels and conduits are clean and free of anything that might hinder proper drainage	
	Check profiles and slats are clean (use pH-neutral soap and dilute heavily)	

Check functioning of optional extras		**OK**
	LED lighting at all levels	
	Music, Bluetooth and loudspeaker equipment	
	Infra-red heating	
	Rain sensor	
	Temperature sensor	

Warnings

- The structural stability of the pergola cannot be guaranteed if any foreign parts are attached to it.
- The proper evacuation of rainwater cannot be guaranteed if you fail to enable the channels and downspouts recommended in the quotation.

Installer comments	
Date, signature and stamp of installer	I confirm receipt of the installed pergola, with no observable defects. I have received and understood the instructions for use and maintenance, and the warranty conditions. **Signed by the client**

MK1240 · EN · 02 · 0623

saxun
by Giménez Ganga

Giménez Ganga, S.L.U.

Polígono Industrial El Castillo
C/ Roma, 4 • 03630
Sax (Alicante) • España

saxun.com